DWG. NO.	SH	REV

REVISIONS

ZONE	REV	ECO NO.	DESCRIPTION	DATE	APPROVED
	A		PLOTTED TO HAVE CURRENT SCHEMATIC, NO UPDATES.	11-92	

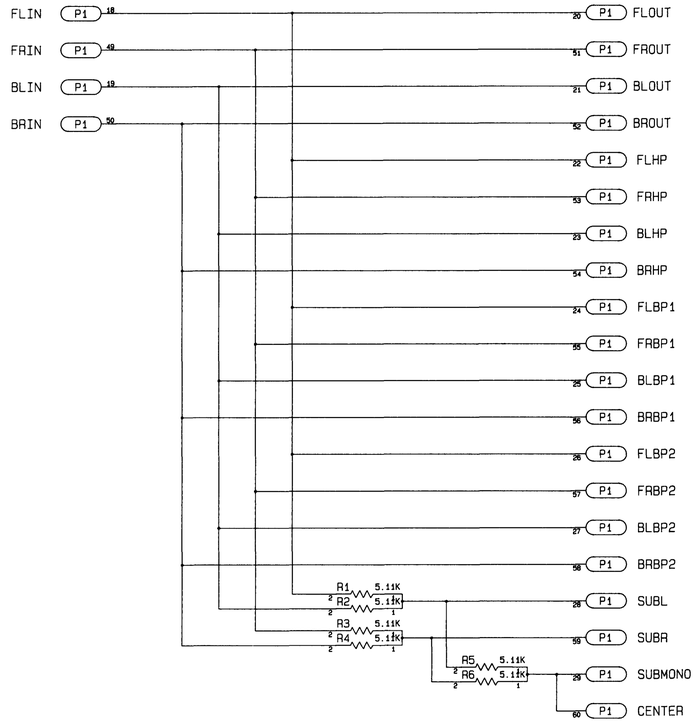

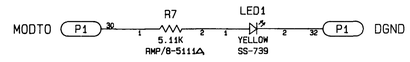

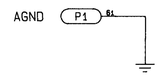

LAST USED LIST					

DO NOT SCALE DRAWING

APPROVALS	DATE
DRAWN WAYNE HARRIS	2/5/91
CHECKED	
FINISH	

TITLE
LOOP THROUGH MODULE

SYMMETRY

SIZE		DWG NO.	REV
D	LTM	SCH-420	A
SCALE		SHEET	