REVISIONS					
ZONE	REV	ECO NO.	DESCRIPTION	DATE	APPROVED
	C	3012	UPDATED TO INCLUDE REV B CHANGES. PRODUCTION RELEASE	11-92	

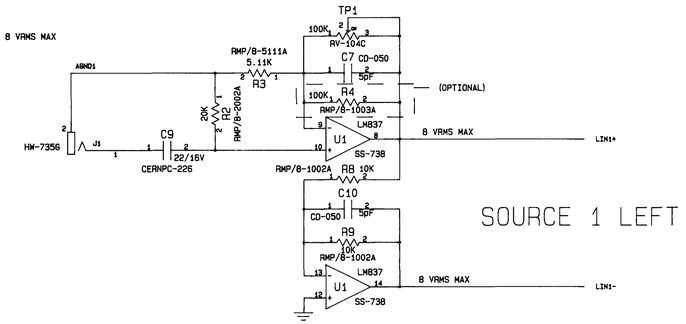

SOURCE 1 LEFT

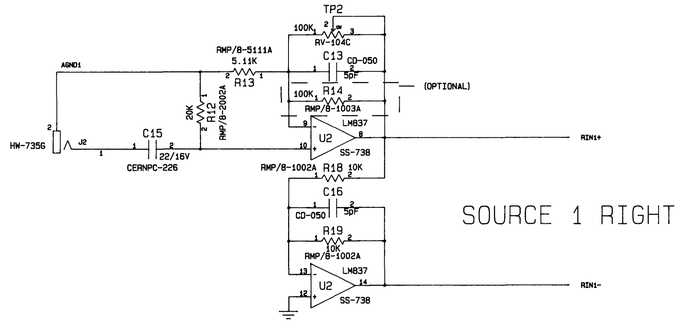

SOURCE 1 RIGHT

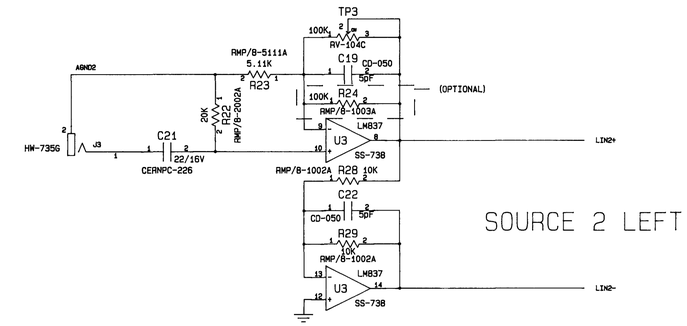

SOURCE 2 LEFT

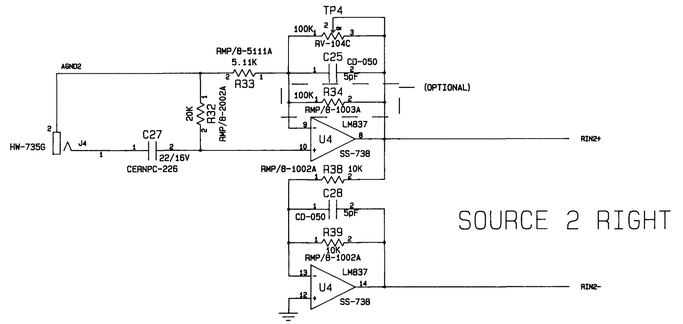

SOURCE 2 RIGHT

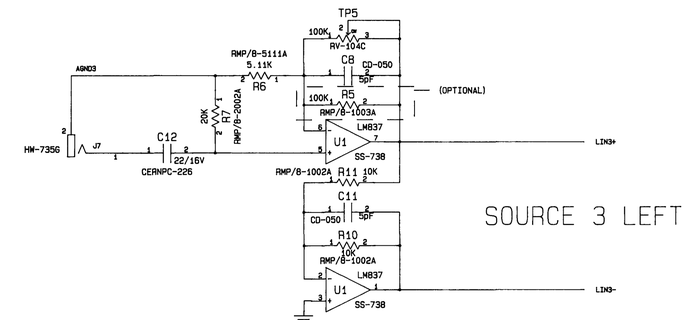

SOURCE 3 LEFT

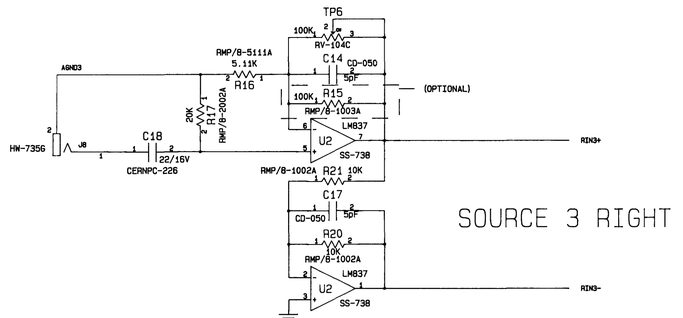

SOURCE 3 RIGHT

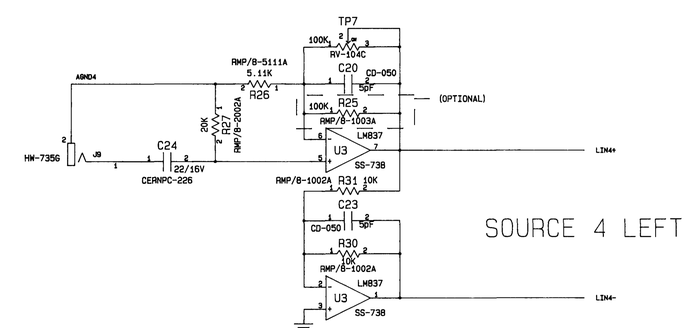

SOURCE 4 LEFT

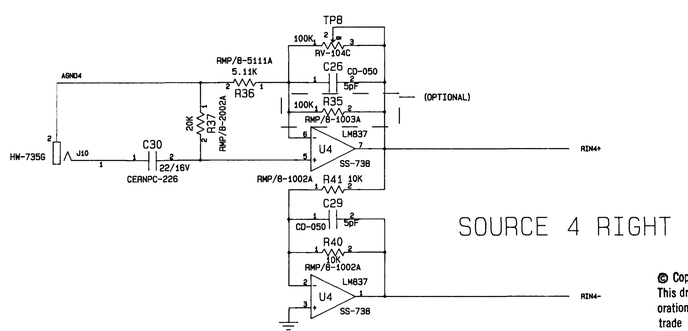

SOURCE 4 RIGHT

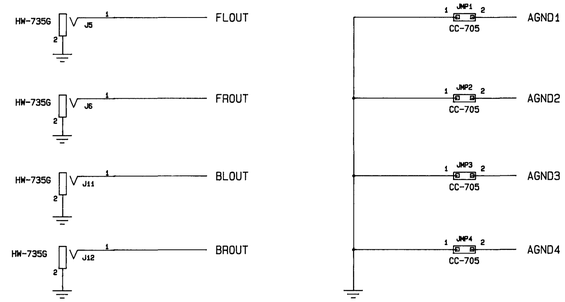

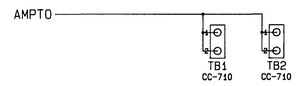

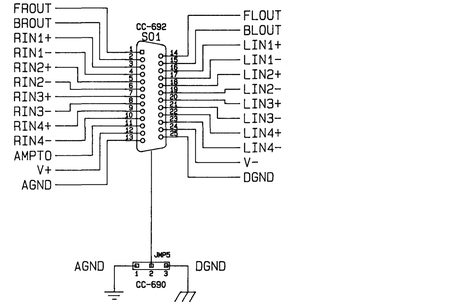

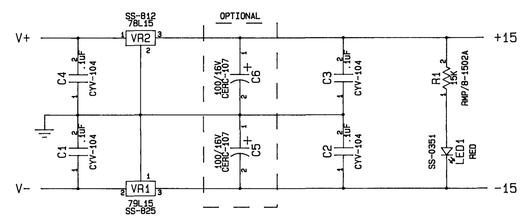

CONFIDENTIAL

© Copyright 1993 Rockford Corporation. This drawing is the property of Rockford Corporation and embodies confidential information, trade secret information, and/or know-how which is the property of Rockford Corporation. By accepting this drawing, the recipient agrees not to provide, or otherwise make available, the drawing, or any information or know-how embodied therein, to any third party without prior written authorization.

APPROVALS	DATE
DRAWN WAYNE HARRIS	12/13/91
CHECKED	
FINISH	

TITLE
MISSING LINK TRANSMITER

SYMMETRY

SIZE	DWG NO.	REV
D	SCH-421	C

SCALE | SHEET 1/1