DWG. NO.	SH	REV

REVISIONS

ZONE	REV	ECO NO.	DESCRIPTION	DATE	APPROVED
	B		PLOTTED TO HAVE CURRENT PLOTS.	11-92	
	C	3030	ALL REWORK UPDATES INCORPORATED. PRODUCTION RELEASE.	12-92	
	C.1	3131	BOM & SCH CHANGE ALL LM833 CHG TO TL072 (SS-1438M).	4-93	
	C.2	3606	BOM & SCH, CHANGE ALL 0805 TO 1206, AND SOME RES VALUE CHANGES.	8-94	
	C.3	3652	BOM & SCH, CHANGE Q1 TO SS-0791	10-94	

+6 DB

-6 DB

+6 DB

-13 DB

+1 TO +25 DB

+6 DB

-12 TO +12 DB

LAST USED LIST

DO NOT SCALE DRAWING

APPROVALS	DATE
DRAWN WAYNE HARRIS	11/11/91
CHECKED	
FINISH	

TITLE
SYMMETRY CROSSOVER
LEFT CHANNELS

SIZE	DWG NO.	REV
D	SCH-431	C.3

SCALE

SHEET 1/4

DWG. NO.	SH	REV

REVISIONS

ZONE	REV	DESCRIPTION	DATE	APPROVED
	C.3	SEE SHT-1	10-94	

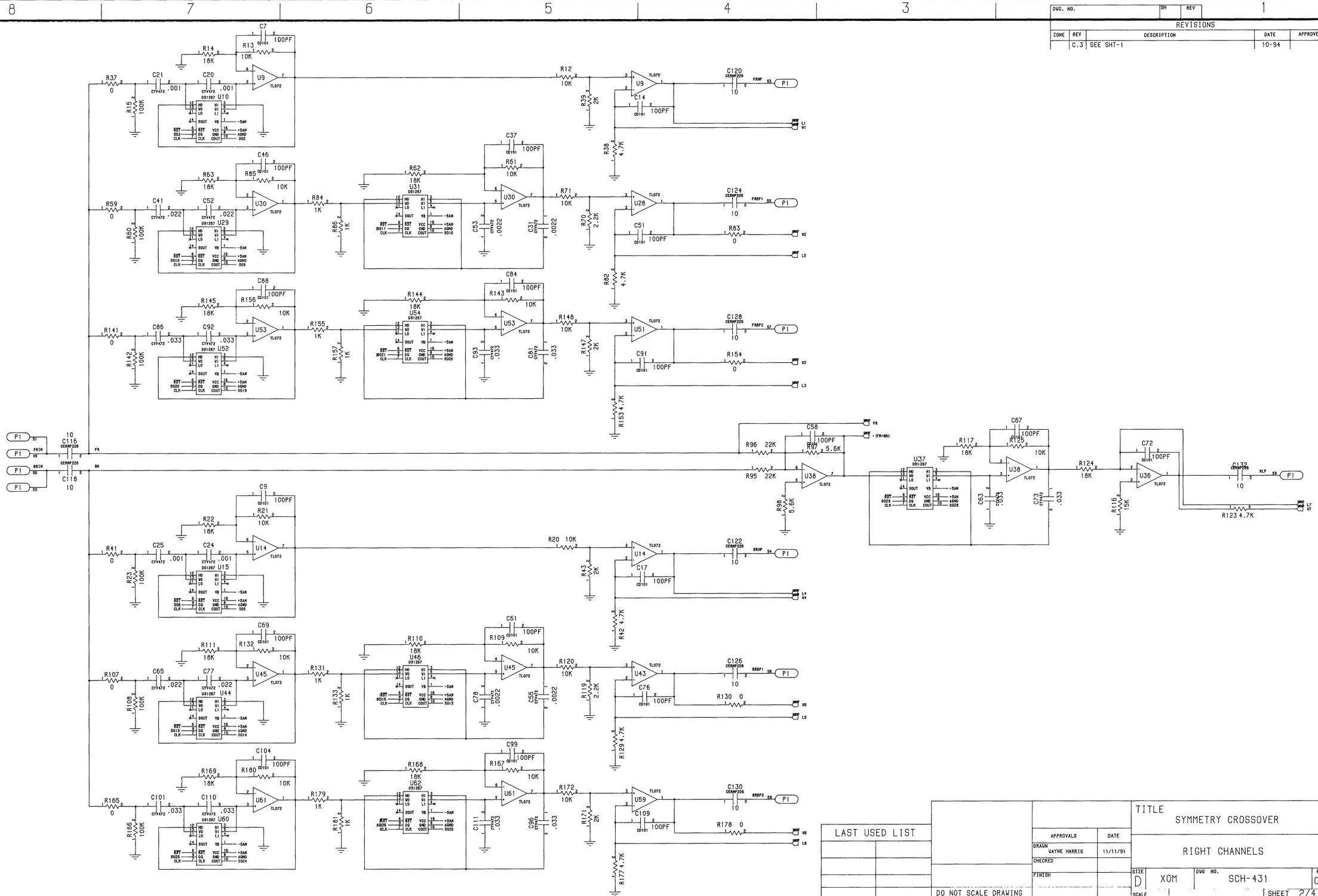

LAST USED LIST

DO NOT SCALE DRAWING

APPROVALS	DATE
DRAWN WAYNE HARRIS	11/11/91
CHECKED	
FINISH	

TITLE
SYMMETRY CROSSOVER

RIGHT CHANNELS

SIZE	DWG NO.	REV
D	SCH-431	C.3

SCALE XOM

SHEET 2/4

DWG. NO.	SH	REV

REVISIONS

ZONE	REV	DESCRIPTION	DATE	APPROVED
	C.3	SEE SHT-1	10-94	

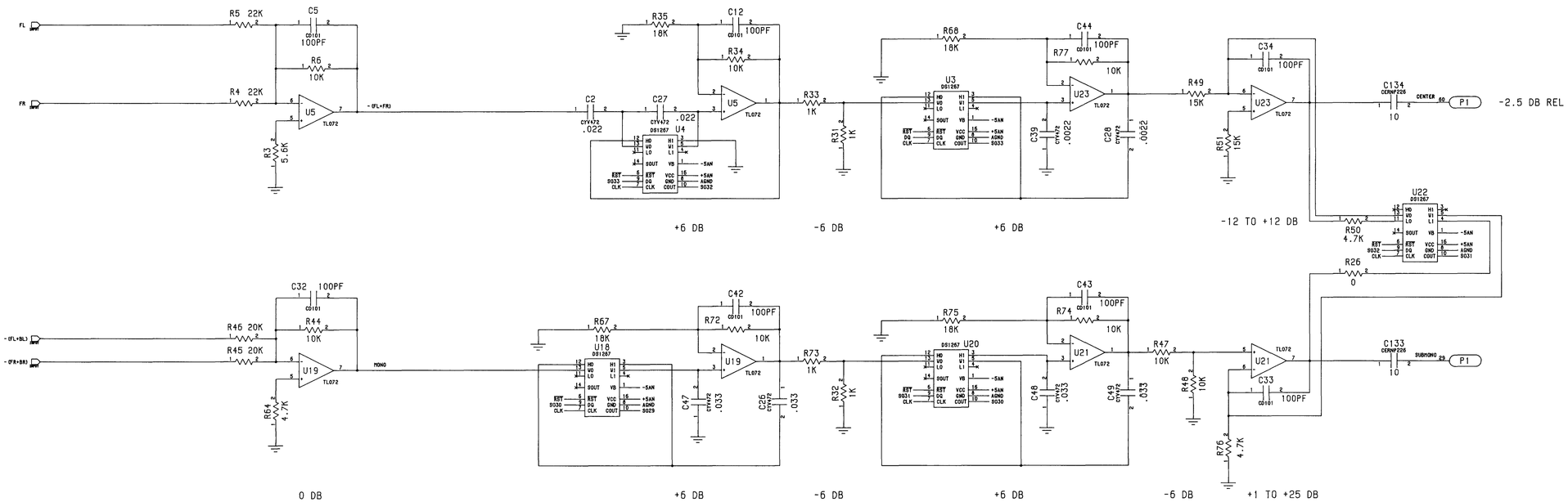

LAST USED LIST			

DO NOT SCALE DRAWING

APPROVALS	DATE
DRAWN WAYNE HARRIS	11/11/91
CHECKED	
FINISH	

TITLE
SYMMETRY CROSSOVER

CENTER/SUB CHANNELS

SIZE	DWG NO.	REV
D	SCH-431	C.3

SCALE | SHEET 3/4

DWG. NO.	SH	REV

REVISIONS

ZONE	REV	DESCRIPTION	DATE	APPROVED
	C.3	SEE SHT-1	10-94	

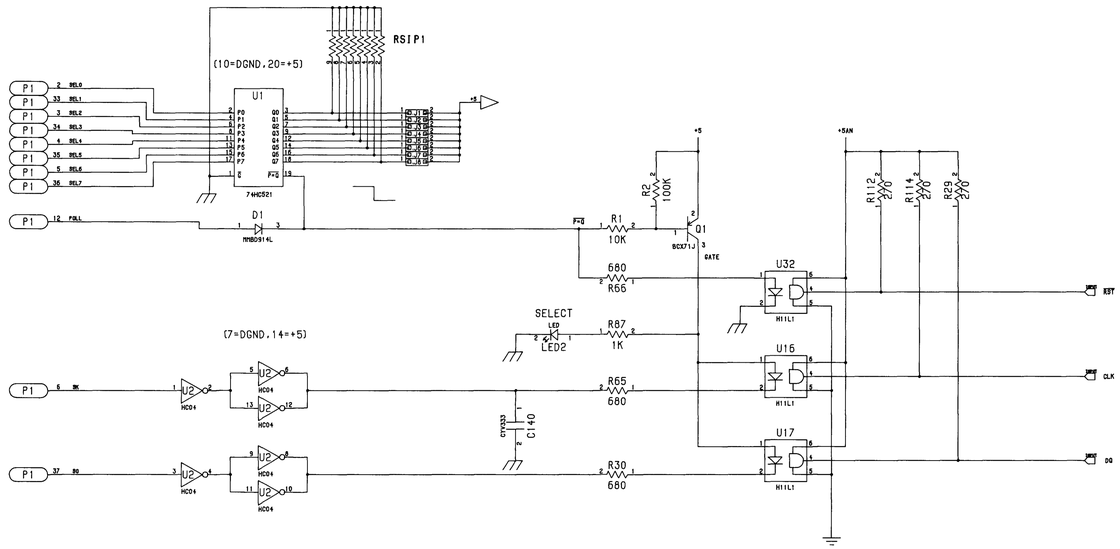

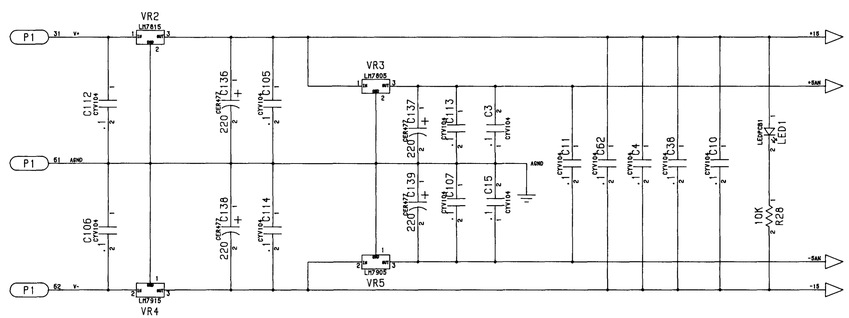

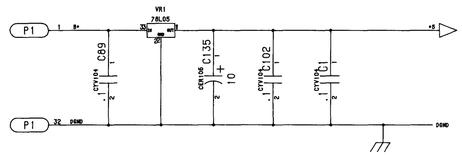



LAST USED LIST					

DO NOT SCALE DRAWING

APPROVALS	DATE
DRAWN WAYNE HARRIS	11/11/91
CHECKED	
FINISH	

TITLE
SYMMETRY CROSSOVER

DECODER AND SUPPLY

SIZE	DWG NO.	REV
D	SCH-431	C.3

SCALE | SHEET 4/4