DWG. NO.	SH	REV

REVISIONS

ZONE	REV	DESCRIPTION	DATE	APPROVED
	B	UPDATED TO INCLUDE REV A UPDATES	11-92	
	C	UPDATED TO INCLUDE ALL REWORK MODIFICATIONS.	1-93	CDN
		RELEASED TO PRODUCTION - ECO 3060		

LEFT

160 HZ 200 HZ 250 HZ 320 HZ 400 HZ 500 HZ 630 HZ

RIGHT

160 HZ 200 HZ 250 HZ 320 HZ 400 HZ 500 HZ 630 HZ

32 HZ 40 HZ 50 HZ 63 HZ 80 HZ 100 HZ 125 HZ

32 HZ 40 HZ 50 HZ 63 HZ 80 HZ 100 HZ 125 HZ

L EQ OUT
SELECT BUS L
PREV CARD BUS L

R EQ OUT
SELECT BUS R
PREV CARD BUS R

FIRST SIGNAL PROCESSOR CARD IN THE AUDIO LOOP SHOULD BE CONNECTED TO THE SELECT BUS

1. SEND RIGHT DATA
2. SEND LEFT DATA
3. SEND SELECT DATA
4. SELECT

CONFIDENTIAL

© Copyright 19 93 Rockford Corporation. This drawing is the property of Rockford Corporation and embodies confidential information, trade secret information, and/or know-how ... Rockford Corporation. By acc... , the recipient agrees not to provide, or otherwise make available, the drawing, or any information or know-how embodied therein, to any third party without prior written authorization.

LAST USED LIST

DO NOT SCALE DRAWING

APPROVALS	DATE
DRAWN WAYNE HARRIS	7/9/92
CHECKED	
FINISH	

TITLE
COMPUTER CONTROLLED EQL

SYMMETRY

SIZE		DWG NO.	REV
D	EQ3L	SCH-0247	C
SCALE		SHEET	

DWG. NO.	SH	REV

REVISIONS

ZONE	REV	ECO NO.	DESCRIPTION	DATE	APPROVED
	B		UPDATED TO INCLUDE REV A UPDATES.	11-92	
	C		UPDATED TO INCLUDE REWORK UPDATES.	1-93	
			RELEASED TO PRODUCTION - ECO 3059		

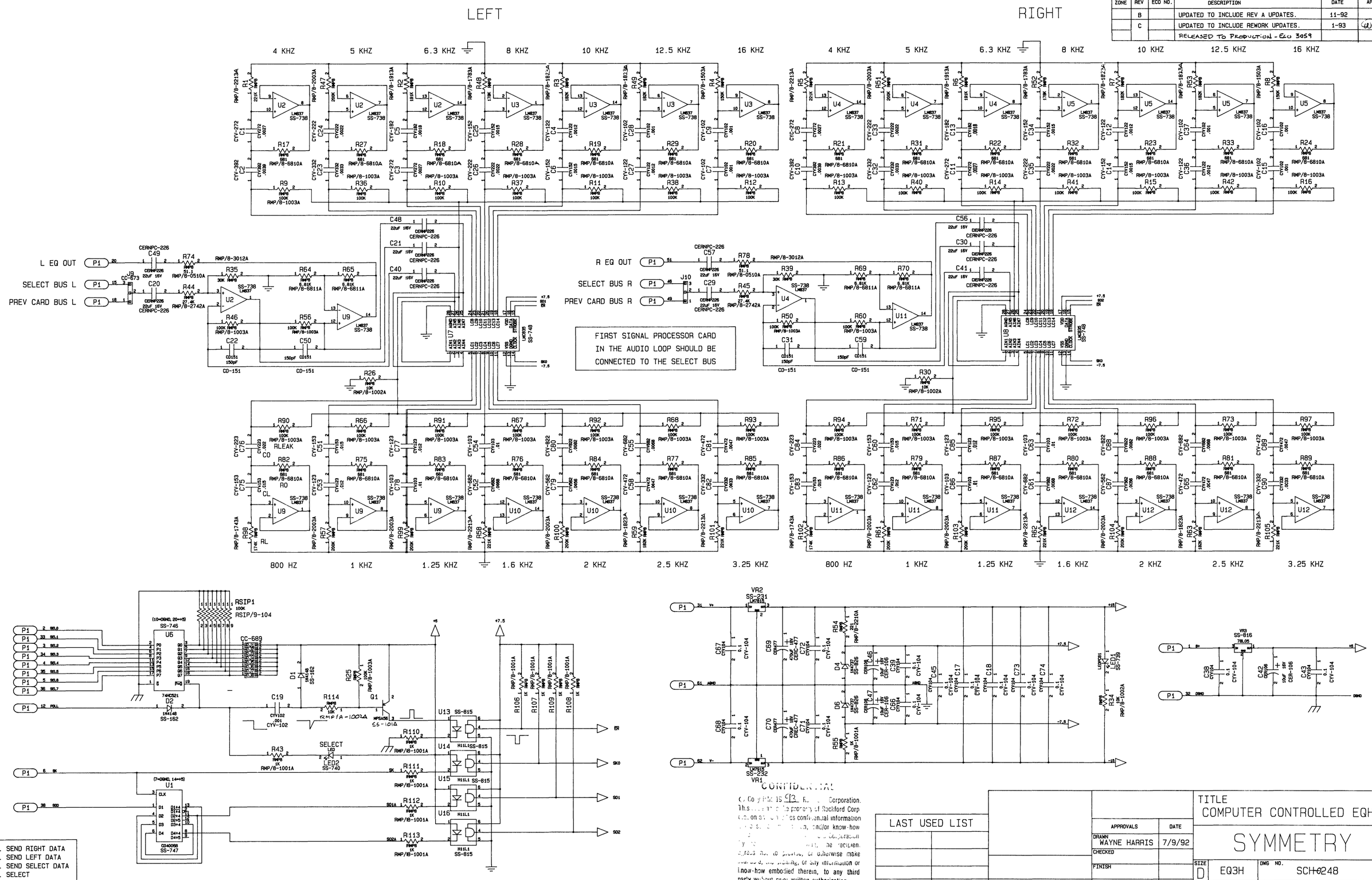

1. SEND RIGHT DATA
2. SEND LEFT DATA
3. SEND SELECT DATA
4. SELECT

CONFIDENTIAL

Copyright 1993 Rockford Corporation. This [illegible] property of Rockford Corp [illegible] confidential information [illegible] and/or know-how [illegible] Corporation [illegible] the recipient agrees not to provide, or otherwise make [illegible] the drawing, or any information or know-how embodied therein, to any third party without prior written authorization.

LAST USED LIST

DO NOT SCALE DRAWING

APPROVALS	DATE
DRAWN WAYNE HARRIS	7/9/92
CHECKED	
FINISH	

TITLE
COMPUTER CONTROLLED EQH

SYMMETRY

SIZE	DWG NO.	REV
D	EQ3H	SCH-0248	C

SCALE | SHEET