DWG. NO.	SH	REV

REVISIONS

ZONE	REV	DESCRIPTION	DATE	APPROVED
	A	PRELIMINARY RELEASE	9-94	
	B	ENGINEERING UPDATE	11-94	
	C	PRODUCTION RELEASE. ENGINEERING UPDATE	1-95	
	D	UPDATE PER ECO 3967	2-96	

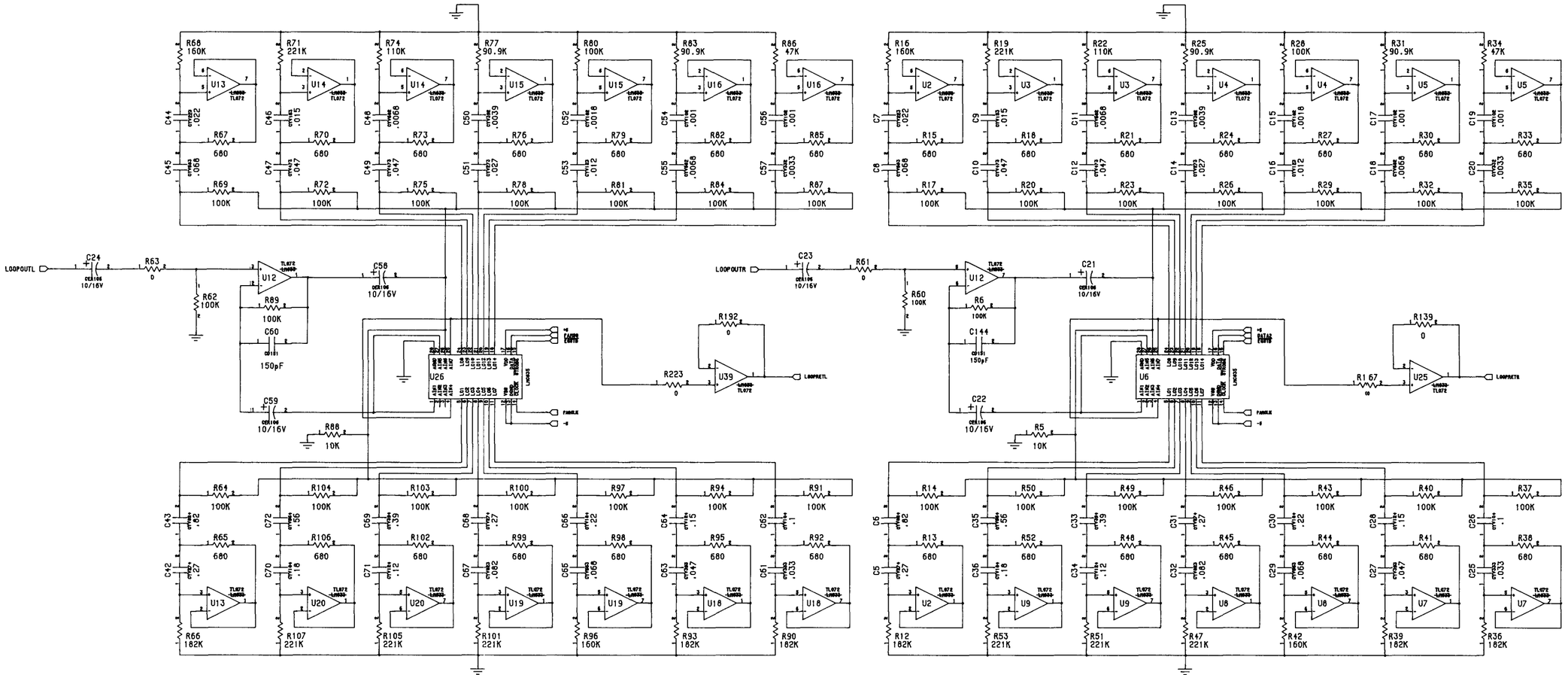

LAST USED LIST					
				DRAWN	DATE
				CHECKED	
				FINISH	
		DO NOT SCALE DRAWING			

ROCKFORD CORPORATION
TEMPE AZ.

SCHEMATIC:
SCHEMATIC,
SYMMETRY E14

SIZE	DWG NO.	REV
D	SCH-0895	D

SCALE

SHEET 1 OF 2

DWG. NO.	SH	REV

REVISIONS

ZONE	REV	DESCRIPTION	DATE	APPROVED
	D	SEE SHT-1	2-96	

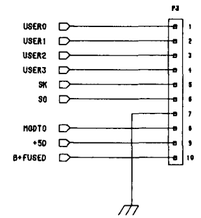

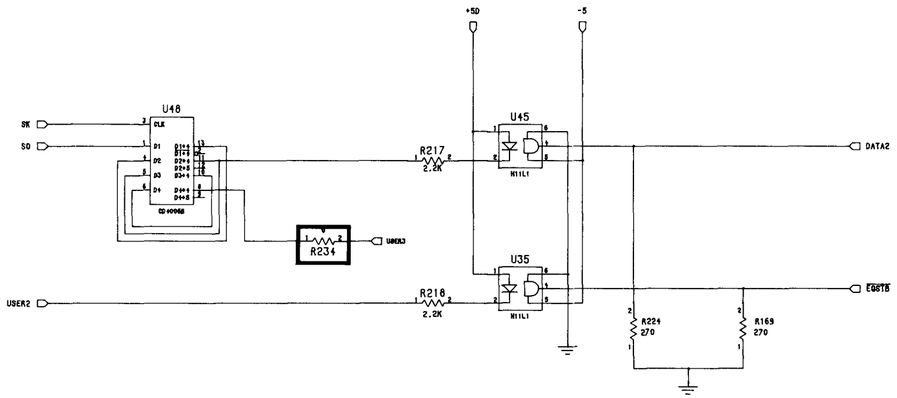

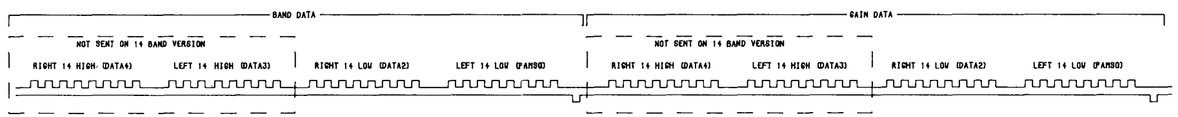

LAST USED LIST

DO NOT SCALE DRAWING

DRAWN

CHECKED

FINISH

DATE

ROCKFORD CORPORATION
TEMPE AZ.

SCHEMATIC:
SCHEMATIC,
SYMMETRY E14

SIZE	DWG NO.	REV
D	SCH-0895	D

SCALE

SHEET 2 OF 2