DWG. NO.	SH	REV

REVISIONS

ZONE	REV	ECO NO.	DESCRIPTION	DATE	APPROVED
	A		PRELIMINARY RELEASE	9-94	
	B		ENGINEERING UPDATE	11-94	
	C		PRODUCTION RELEASE. ENGINEERING UPDATE	1-95	
	C.1	3813	UPDATE PER ECO	5-95	
	D	3967	UPDATE PER ECO	1-96	

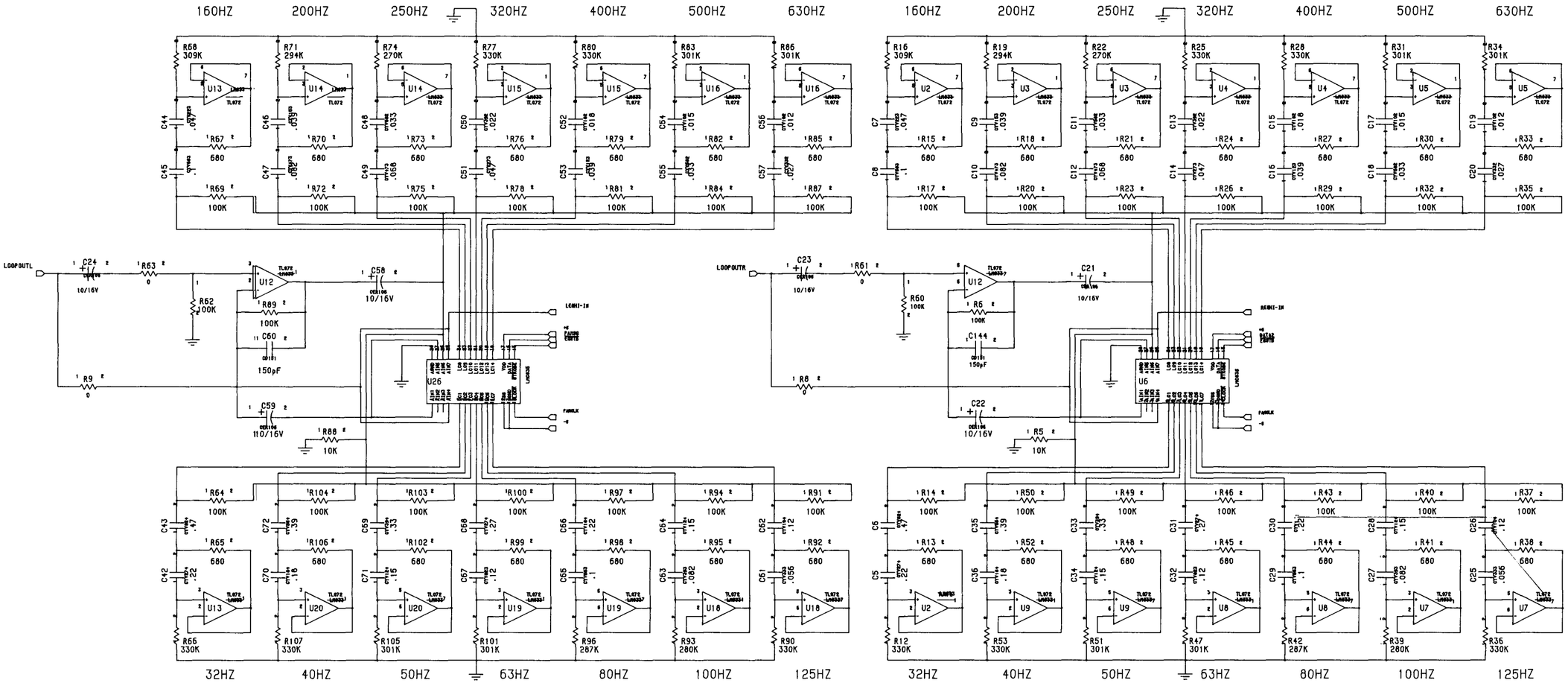

LAST USED LIST

DO NOT SCALE DRAWING

	DATE
DRAWN	
CHECKED	
FINISH	

ROCKFORD CORPORATION
TEMPE AZ.

SCHEMATIC: SCHEMATIC, SYMMETRY E28

SIZE D | DWG NO. SCH-0894 | REV D

SCALE | SHEET 1 OF 3

DWG. NO.	SH	REV

REVISIONS

ZONE	REV	DESCRIPTION	DATE	APPROVED
	D1	SEE SHT-1	1-96	

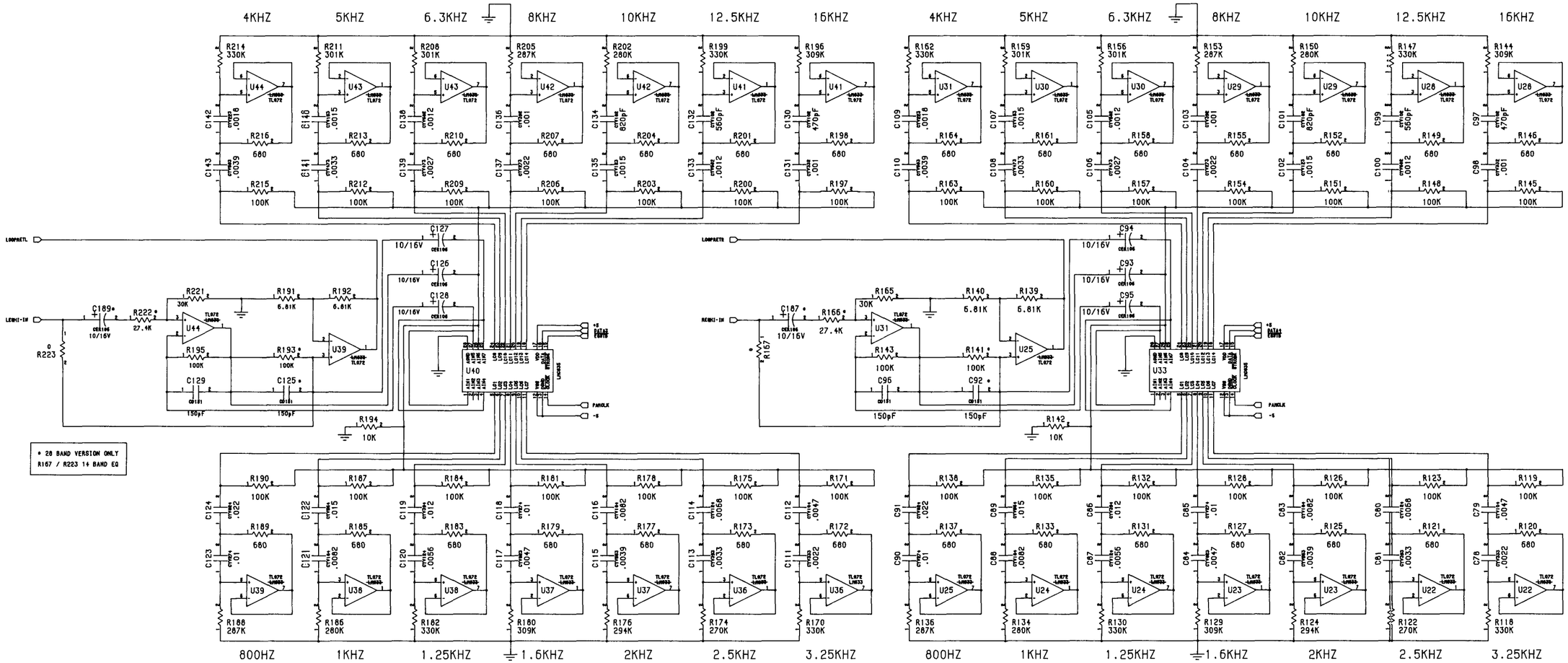

LAST USED LIST				DATE
			DRAWN	
			CHECKED	
			FINISH	
		DO NOT SCALE DRAWING		

ROCKFORD CORPORATION
TEMPE AZ.

SCHEMATIC:
SCHEMATIC,
SYMMETRY E28

SIZE	DWG NO.	REV
D	SCH-0894	D

SCALE | SHEET 2 OF 3

DWG. NO.	SH	REV

REVISIONS

ZONE	REV	DESCRIPTION	DATE	APPROVED
	D	SEE SHT-1	1-96	

OPTIONAL LED BARGRAPH INDICATORS

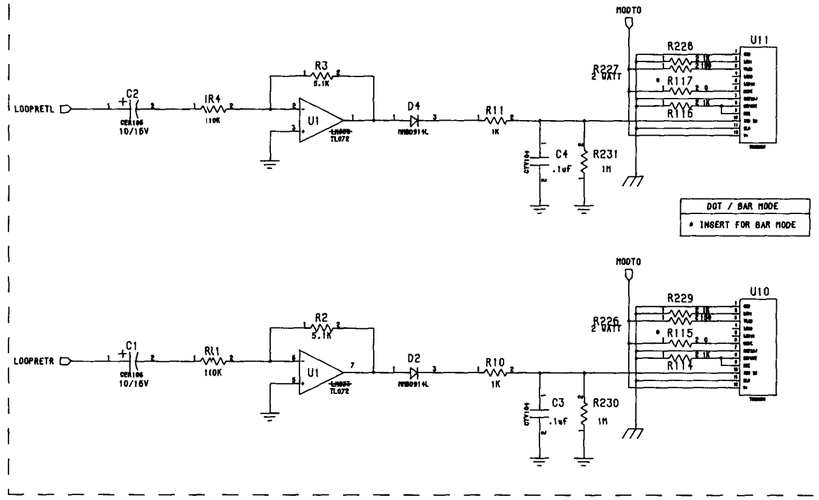

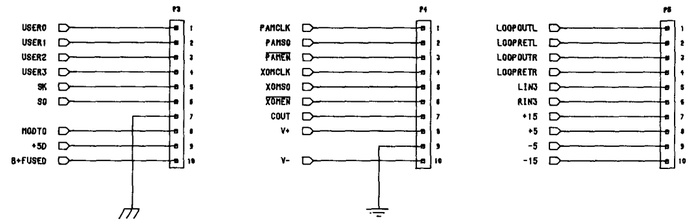

OPTIONAL PINK NOISE GENERATOR CIRCUITRY

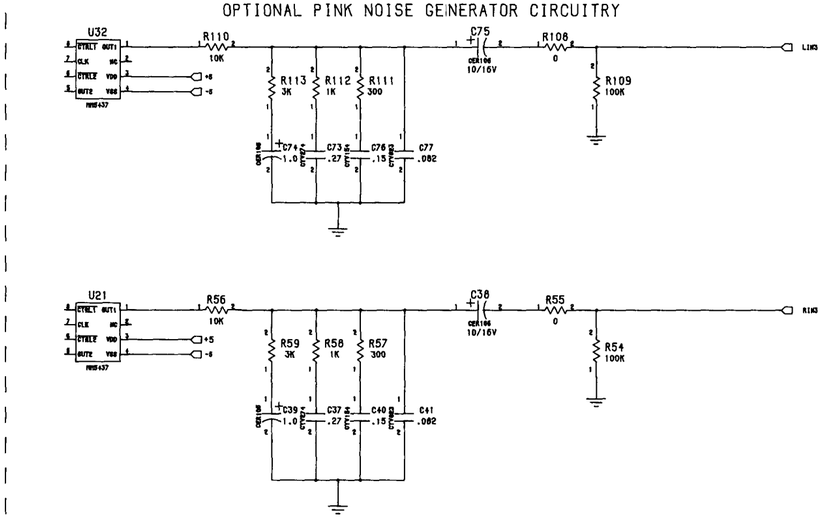

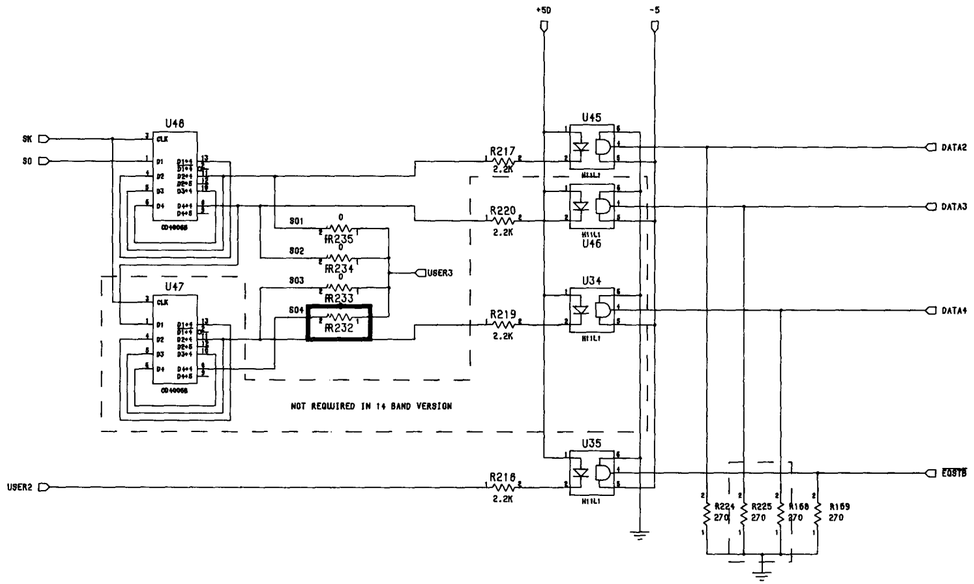

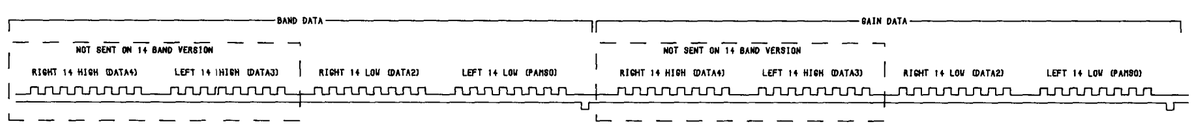

LAST USED LIST

DO NOT SCALE DRAWING

	DATE
DRAWN	
CHECKED	
FINISH	

ROCKFORD CORPORATION
TEMPE AZ.

SCHEMATIC: SCHEMATIC, SYMMETRY E28

SIZE	DWG NO.	REV
D	SCH-0894	D

SCALE

SHEET 3 OF 3