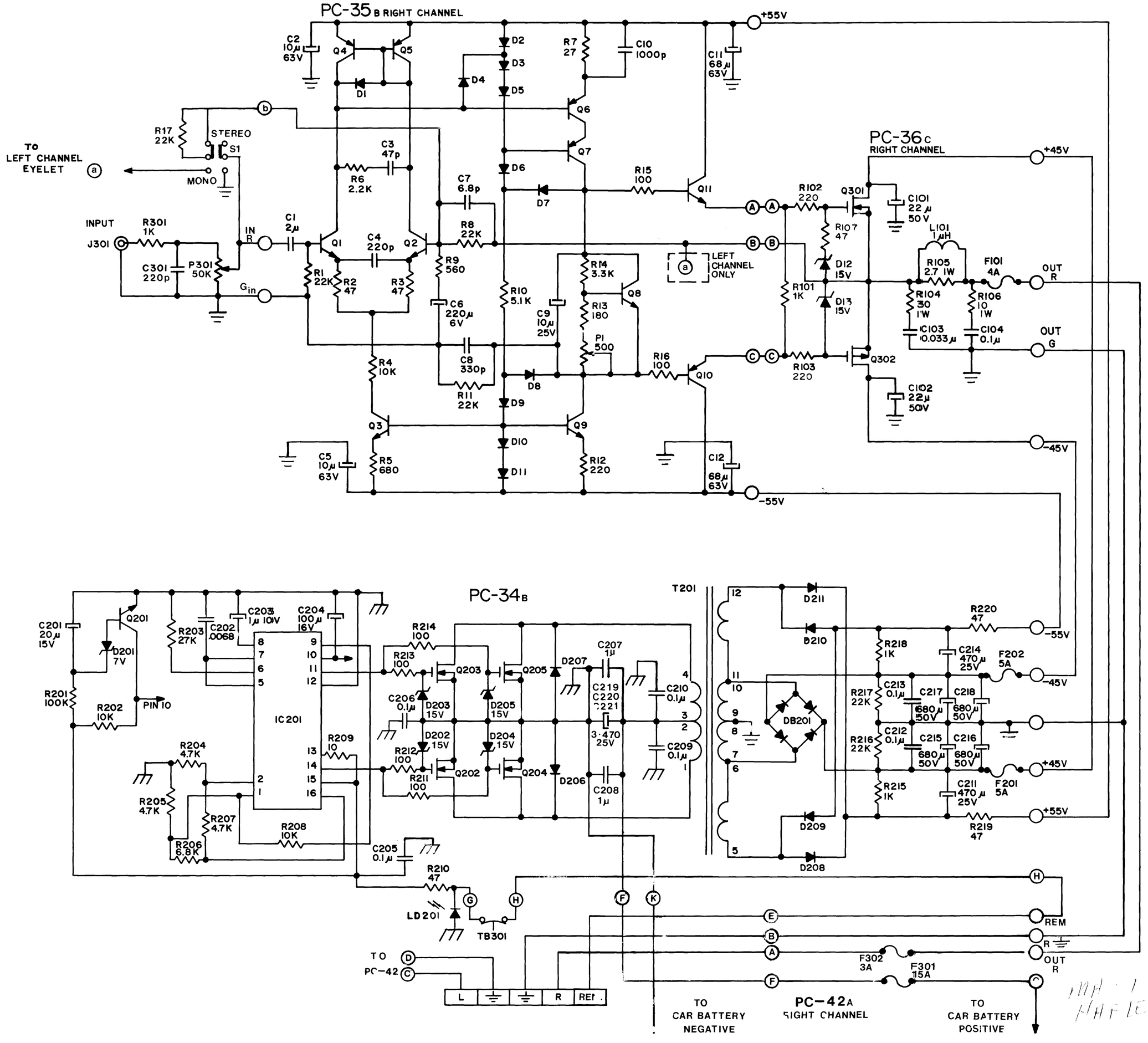
PC-35 B RIGHT CHANNEL
+55V
C2 10µ 63V
Q4
Q5
D1
D2
D3
D4
D5
R7 27
C10 1000p
C11 68µ 63V
Q6
Q7
D6
D7
R15 100
Q11
R17 22K
STEREO
S1
MONO
TO LEFT CHANNEL EYELET
C3 47p
R6 2.2K
C7 6.8p
INPUT
J301
R301 1K
C301 220p
P301 50K
IN R
C1 2µ
Q1
C4 220p
Q2
R8 22K
R9 560
R1 22K
R2 47
R3 47
Gin
C6 220µ 6V
R10 5.1K
C9 10µ 25V
R14 3.3K
Q8
R13 180
P1 500
R4 10K
C8 330p
R11 22K
D8
D9
R16 100
Q10
Q3
Q9
D10
D11
C5 10µ 63V
R5 680
R12 220
C12 68µ 63V
-55V
PC-36 C
RIGHT CHANNEL
+45V
R102 220
Q301
C101 22µ 50V
L101 1µH
R107 47
D12 15V
D13 15V
LEFT CHANNEL ONLY
R101 1K
R105 2.7 1W
F101 4A
OUT R
R104 30 1W
R106 10 1W
C103 0.033µ
C104 0.1µ
OUT G
R103 220
Q302
C102 22µ 50V
-45V
PC-34 B
T201
C201 20µ 15V
Q201
D201 7V
R201 100K
R202 10K
PIN 10
R203 27K
C202 .0068
C203 1µ 10V
C204 100µ 16V
IC201
R204 4.7K
R205 4.7K
R206 6.8K
R207 4.7K
R208 10K
R209 10
R214 100
R213 100
Q203
Q205
D207
C207 1µ
C206 0.1µ
D203 15V
D205 15V
C219 C220 C221 3·470 25V
C210 0.1µ
C209 0.1µ
D202 15V
D204 15V
R212 100
R211 100
Q202
Q204
D206
C208 1µ
C205 0.1µ
D211
D210
DB201
D209
D208
R220 47
R218 1K
C214 470µ 25V
F202 5A
C213 0.1µ
C217 680µ 50V
C218 680µ 50V
R217 22K
C212 0.1µ
C215 680µ 50V
C216 680µ 50V
R216 22K
R215 1K
C211 470µ 25V
F201 5A
R219 47
+55V
R210 47
LD201
TB301
REM
R
OUT R
F302 3A
F301 15A
TO PC-42
L
R
REM
TO CAR BATTERY NEGATIVE
PC-42A
SIGHT CHANNEL
TO CAR BATTERY POSITIVE