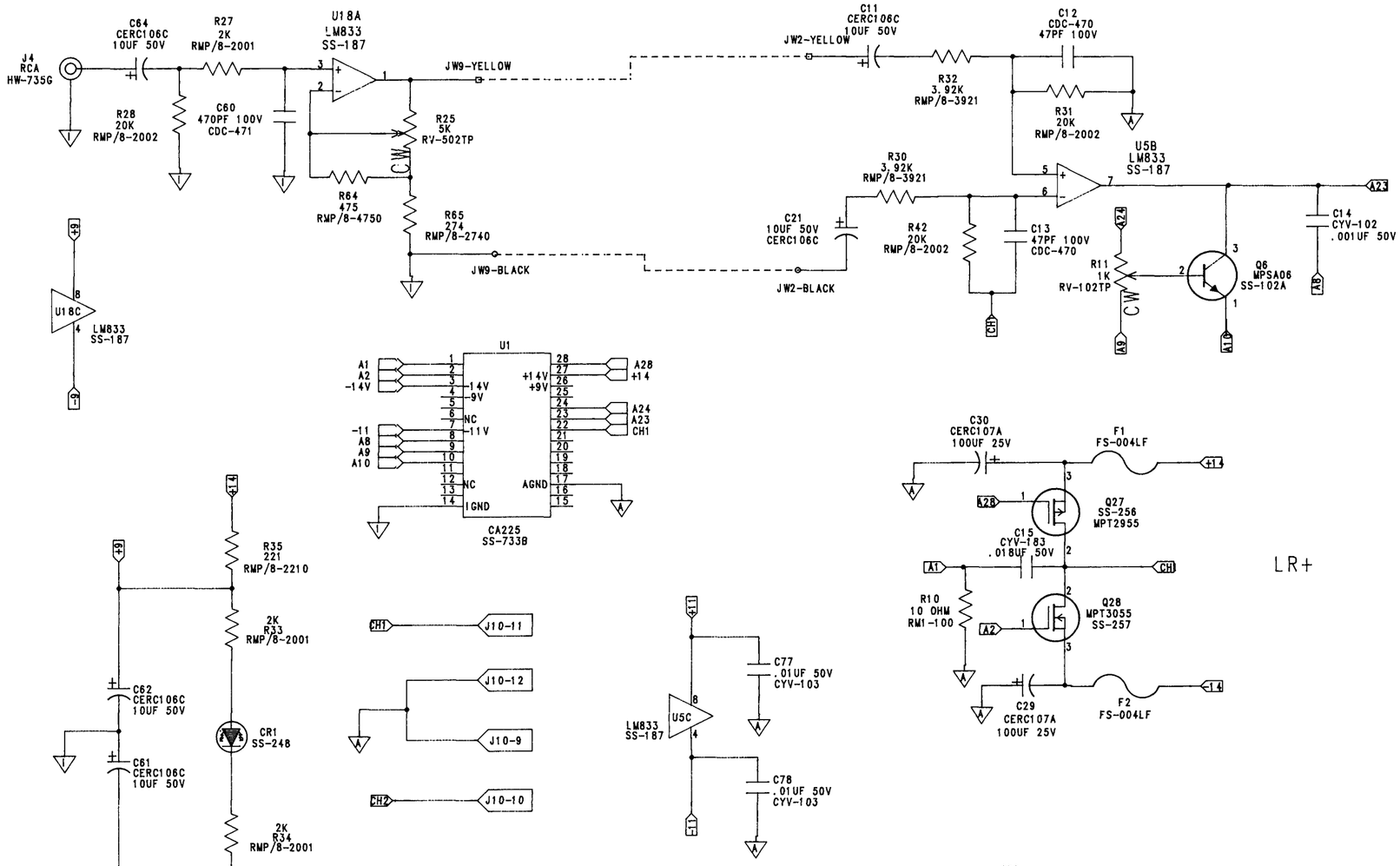

CONFIDENTIAL

© Copyright 1991 Rockford Corporation. This drawing is the property of Rockford Corporation and embodies confidential information, trade secrets, invention, and/or know-how which is the property of Rockford Corporation. By accepting this drawing, the recipient agrees not to provide, or otherwise make available, the drawing, or any information or know-how embodied therein, to any third party without prior written authorization.

Z	SYM	DA	REVISION RECORD	AUTHORITY	DRAW	CHECK
		1/11/91	RELEASED	G ROCHELEAU	D. SERNA	Z J CHOW
		4/30/91	ECO 2011	G ROCHELEAU		Z J CHOW

NO.	LV		DESCRIPTION & REF DES	PART NO.	QTY.	COMMENT
25			RED LED CR1	SS-248	1	
24			.01UF 50V C77, C78	CYV-103	2	
23			12-PIN MOLEX J10-9, J10-10 J10-11, J10-12	CC-652	1/3	
22			MPT3055E Q28, Q30	SS-257	2	
21			MPT2955 Q27, Q29	SS-256	2	
20			MPS-A06 Q7, Q6	SS-102A	2	
19			CA225 U1, U6	SS-733B	2	
18			LM833 U5, U18	SS-187	2	
17			4AMP F1, F2 F3, F4	FS-004LF	4	
16			.018UF 50V C15, C19	CYV-183	2	
15			47PF 100V C12, C13 C23, C24	CDC-470	4	
14			.001UF 50V C14, C25	CYV-102	2	
13			470PF 100V C60, C71	CDC-471	2	
12			100UF 25V C29, C30 C31, C32	CERC107A	4	
11			10UF 50V C11, C21, C22, C26 C61, C64, C62, C72	CERC106C	8	
10			1K OHM R11, R37	RV-102TP	2	
9			5K OHM R25, R75	RV-502TP	2	
8			10 OHM R10, R13	RM1-100	2	
7			3.92K OHM R30, R32 R38, R40	RMP/8-3921	4	
6			475 OHM R64, R78	RMP/8-4750	2	
5			274 OHM R65, R79	RMP/8-2740	2	
4			20K OHM R28. R31, R39 R41, R42, R77	RMP/8-2002	6	
3			221 OHM R35, R36	RMP/8-2210	2	
2			2K OHM R33, R34 R27, R76	RMP/8-2001	4	
1			RCA J4, J7	HW-735G	2	

CORRECTIONS

SYM	CHANGE	BY	DA

DWN	D. SERNA	
CHK	Z J CHOW	12/18/90
ENGR	G ROCHELEAU	12/19/90
APVD	G.R.	7/23/91
APVD		
MATL/FS		

ROCKFORD FOSGATE CORPORATION DIVISION TEMPE AZ

TITLE: MSE120 CHANNELS 1 AND 2

SIZE C | SCALE NONE | SHEET 1 OF 4

FILE NAME: MSE120E | PART NO.: SCH-MSE120 | REV: E

PART NO. SCH-MSE120 | FILE NAME MSE120E | REV E

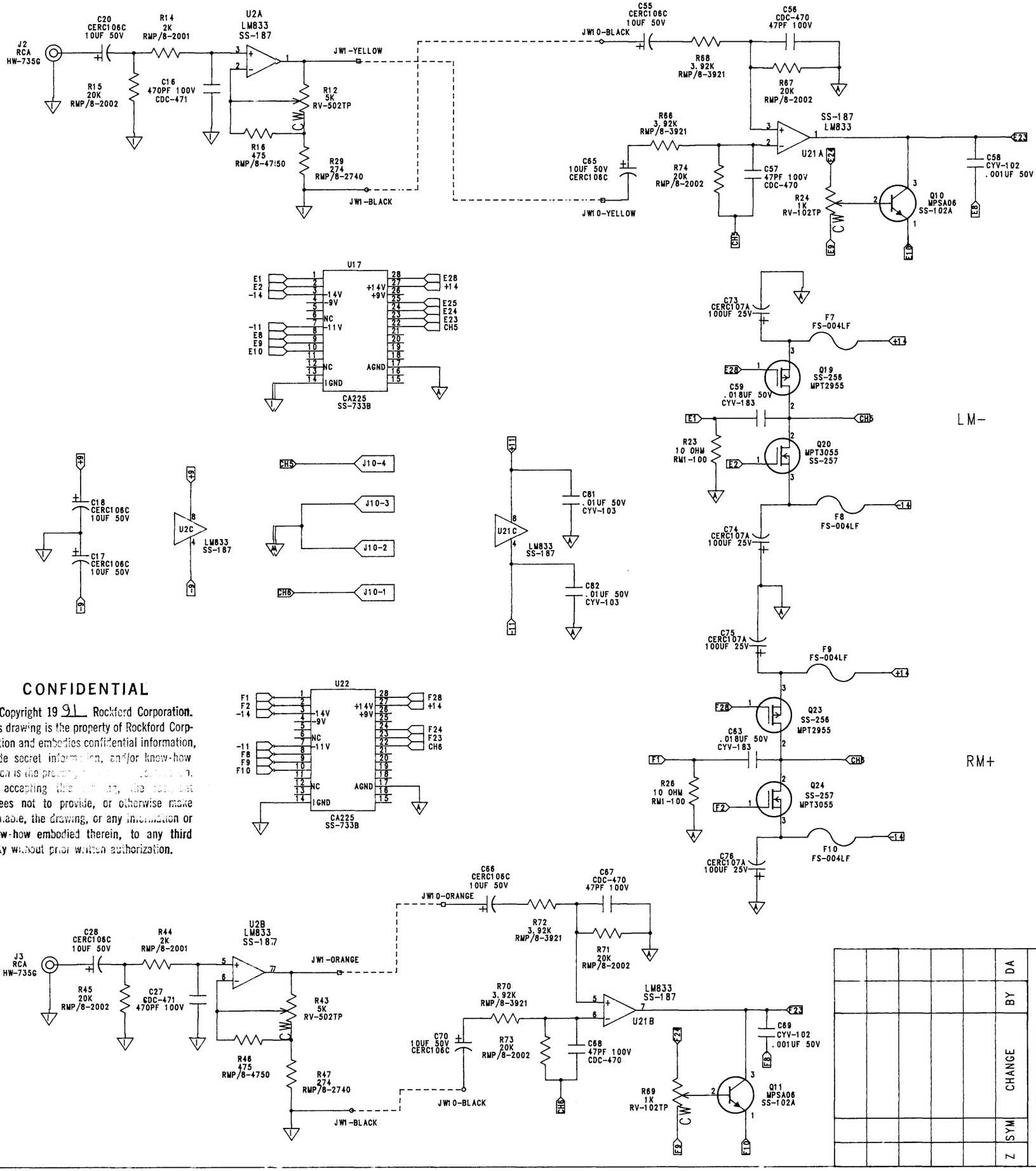

CONFIDENTIAL

© Copyright 19 91 Rockford Corporation. This drawing is the property of Rockford Corporation and embodies confidential information, trade secret information, and/or know-how which is the property of Rockford Corporation. By accepting this drawing, the recipient agrees not to provide, or otherwise make available, the drawing, or any information or know-how embodied therein, to any third party without prior written authorization.

Z	SYM	DA	REVISION RECORD	AUTHORITY	DRAW	CHECK
		7/23/91	ECO 2102 REV E	G.K.		

NO.	LV		DESCRIPTION & REF DES	PART NO.	QTY.	COMMENT
23			.01uF 50V C81, C82	CYV-103	2	
22			12-PIN MOLEX J10-1, J10-2 J10-3, J10-4	CC-652	1/3	
21			MPT3055E Q20, Q24	SS-257	2	
20			MPT2955 Q19, Q23	SS-256	2	
19			MPSA06 Q10, Q11	SS-102A	2	
18			CA225B U17, U22	SS-733B	2	
17			LM833 U2, U21	SS-187	2	
16			4AMP F7, F8 F9, F10	FS-004LF	4	
15			.018uF 50V C59, C63	CYV-183	2	
14			47PF 100V C56, C57 C67, C68	CDC-470	4	
13			.001uF 50V C58, C69	CYV-102	2	
12			470pF 100V C16, C27	CDC-471	2	
11			100uF 25V C73, C74 C75, C76	CERC107A	4	
10			10uf 50V C17, C18. C20, C28 C65, C66, C70, C55	CERC106C	8	
9			1K OHM R24, R69	RV-102TP	2	
8			5K OHM R12, R43	RV-502TP	2	
7			10 OHM R23, R26	RM1-100	2	
6			3.92K OHM R66, R68 R70, R72	RMP/8-3921	4	
5			475 OHM R16, R46	RMP/8-4750	2	
4			274 OHM R29, R47	RMP/8-2740	2	
3			20K OHM R15, R45, R67 R71, R73, R74	RMP/8-2002	6	
2			2K OHM R14, R44	RMP/8-2001	2	
1			RCA J2, J3	HW-735G	2	

CORRECTIONS: DA / BY / CHANGE / SYM / Z

DWN	D. SERNA	
CHK	Z J CHOW	1/11/91
ENGR	G ROCHELEAU	1/11/91
APVD		
APVD		

ROCKFORD FOSGATE CORPORATION DIVISION TEMPE AZ

TITLE: MSE120 CHANNELS 5 AND 6

SIZE C | SCALE NONE | SHEET 2 OF 4

MATL/FS | FILE NAME MSE120E | PART NO. SCH-MSE120 | REV E

PART NO. SCH-MSE120 | FILE NAME MSE120E | REV E

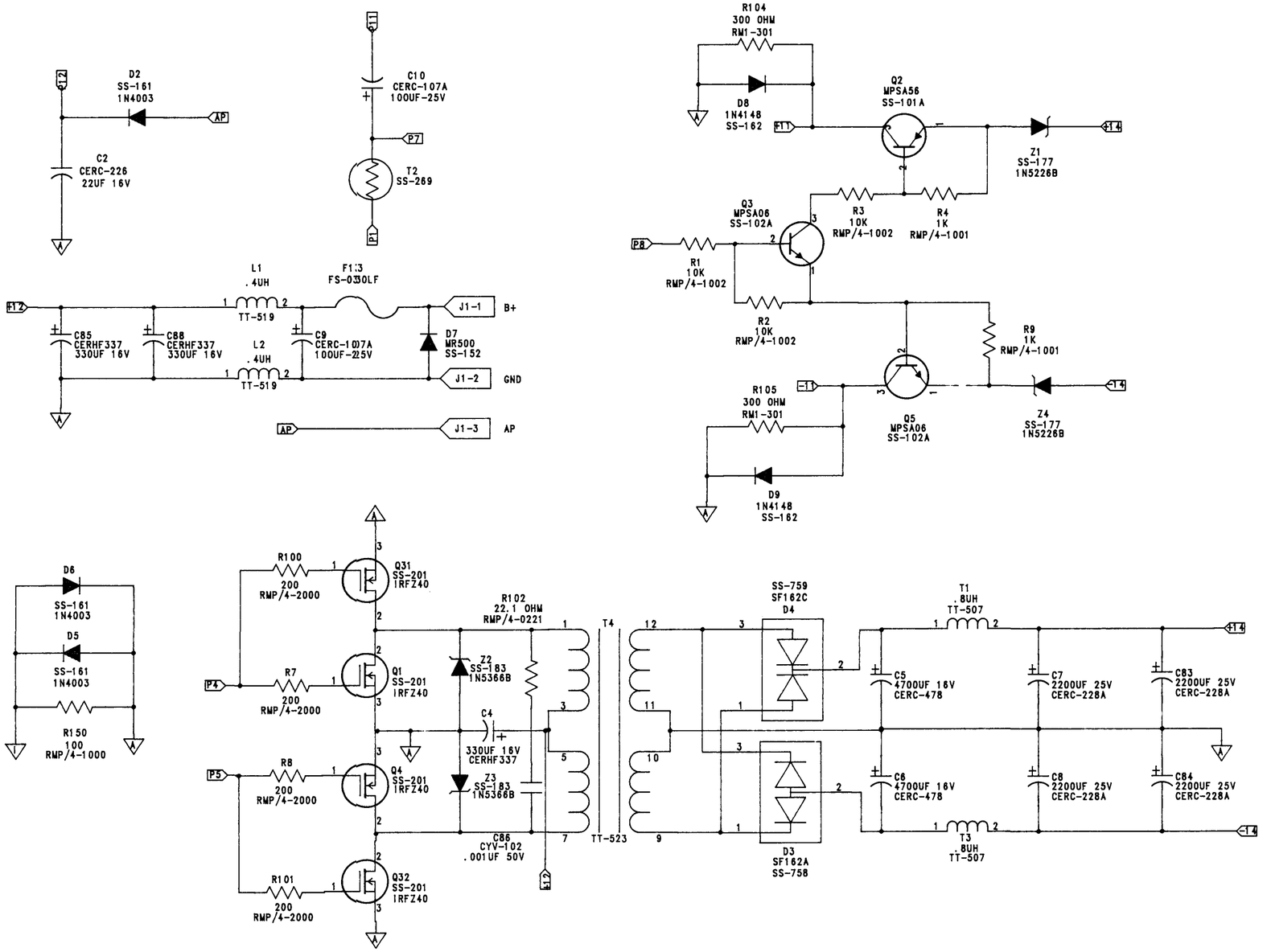

Z	SYM	DA	REVISION RECORD	AUTHORITY	DRAW	CHECK

25			1K OHM R4, R9	RMP/4-1001	2	
24			100 OHM R150	RMP/4-1000	1	
23			TRANSFORMER T4	TT-523	1	
22			LMI POWER TERM.. J1-1, J1-2 J1-3	CC-215	1	
21			SF162A D3	SS-758	1	
20			SF162C D4	SS-759	1	
19			UNIVERSAL POWER SUPPLY MODULE HB1	HB-PWM	1	
18			.4UH L1, L2	TT-519	2	
17			.8UH T1, T3	TT-507	2	
16			THERMISTOR T2	SS-269	1	
15			1N5366B Z2, Z3	SS-183	2	
14			1N5226B Z1, Z4	SS-177	2	
13			MR500 D7	SS-152	1	
12			1N4003 D2, D5, D6	SS-161	3	
11			MPSA56 Q2	SS-101A	1	
10			MPSA06 Q5, Q3	SS-102A	2	
9			IRFZ40 Q4, Q1 Q31, Q32	SS-201	4	
8			2200UF 25V C7, C8 C83, C84	CERC-228A	4	
7			4700UF 16V C5, C6	CERC-478	2	
6			330UF 16VHF C4, C85, C88	CERHF-337	3	
5			100uF 25V C9, C10	CERC-107A	2	
4			10UF 50V C1	CERC-106C	1	
3			75.0K OHM R5, R6	RMP/4-7502	2	
2			10K OHM R1, R2 R3	RMP/4-1002	3	
1			200 OHM R7, R8 R100, R101	RMP/4-2000	4	
NO.	LV		DESCRIPTION & REF DES	PART NO.	QTY	COMMENT

31			300 OHM 1W R104, R105	RM1-301	2	
30			.001UF 50V C86	CYV-102	1	
29			22.1 OHM 1/4W 1% R102	RMP/4-0221	1	
28			30 AMP BLADE FUSE F13	FS-030LF	1	
27			1N4148 D8, D9	SS-162	2	
26			22uF 16V C2	CERC-226	1	

CONFIDENTIAL

© Copyright 19 91 Rockford Corporation. This drawing is the property of Rockford Corporation and embodies confidential information, trade secret information, and/or know-how which is the property of Rockford Corporation. By accepting this drawing, the recipient agrees not to provide, or otherwise make available, the drawing, or any information or know-how embodied therein, to any third party without prior written authorization.

						DA	CORRECTIONS
						BY	
						CHANGE	
						SYM	
						Z	

DWN	D. SERNA		ROCKFORD CORPORATION FOSGATE DIVISION TEMPE AZ
CHK			
ENGR	Rocheleau	4/30/91	TITLE MSE120 POWER SUPPLY
APVD			
APVD			SIZE C / SCALE NONE / SHEET 3 OF 4
MATL/FS			FILE NAME MSE120E / PART NO. SCH-MSE120 / REV E

REV E
FILE NAME MSE120E
PART NO. SCH-MSE120

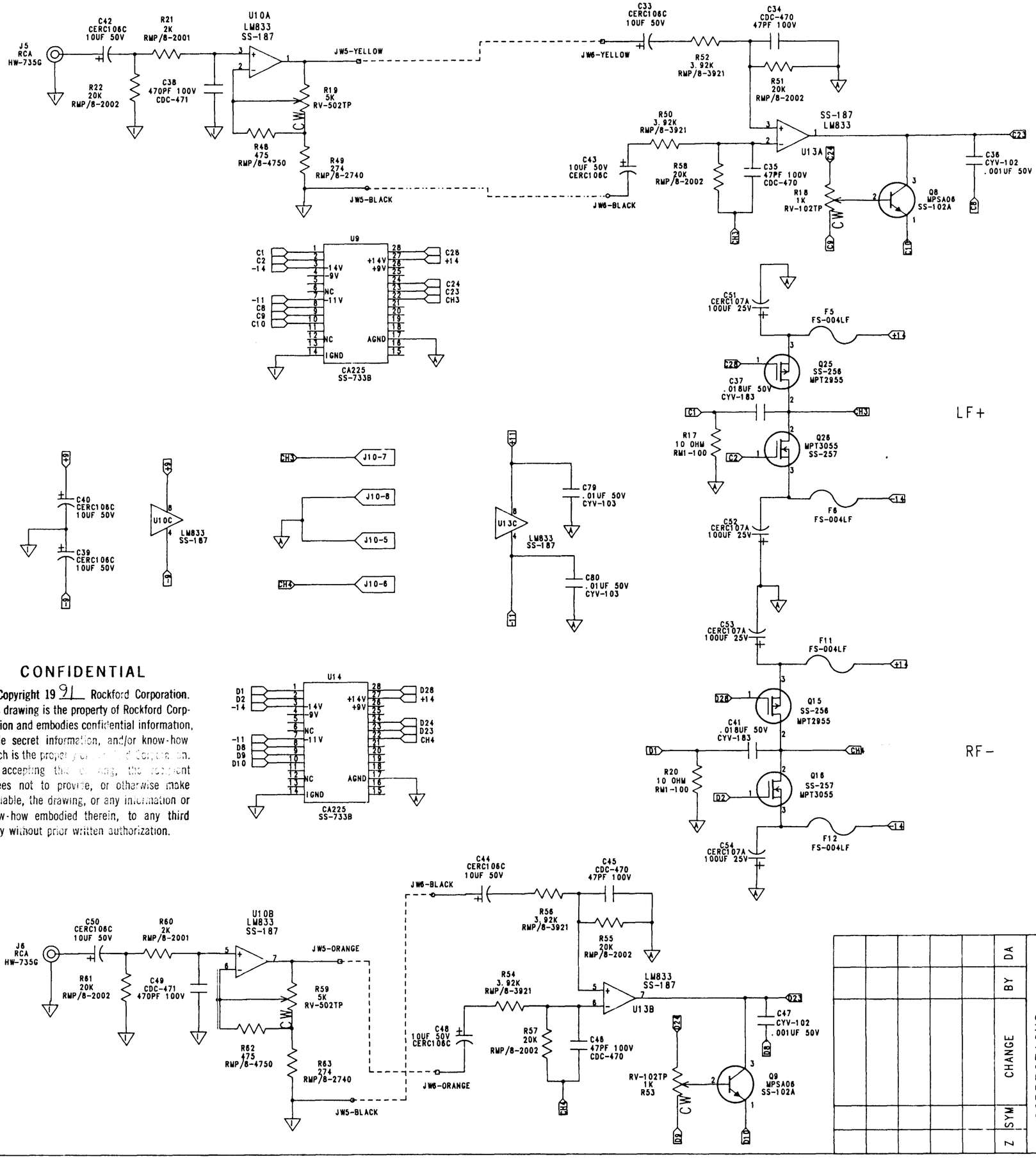

CONFIDENTIAL

© Copyright 1991 Rockford Corporation. This drawing is the property of Rockford Corporation and embodies confidential information, trade secret information, and/or know-how which is the property of Rockford Corporation. By accepting this drawing, the recipient agrees not to provide, or otherwise make available, the drawing, or any information or know-how embodied therein, to any third party without prior written authorization.

Z	SYM	DA	REVISION RECORD	AUTHORITY	DRAW	CHECK

NO.	LV		DESCRIPTION & REF DES	PART NO.	QTY.	COMMENT
23			.01uF 50V C79, C80	CYV-103	2	
22			12-PIN MOLEX J10-5, J10-6 J10-7, J10-8	CC-652	1/3	
21			MPT3055E Q26, Q16	SS-257	2	
20			MPT2955 Q25, Q15	SS-256	2	
19			MPS-A06 Q8, Q9	SS-102A	2	
18			CA225B U9, U14	SS-733B	2	
17			LM833 U10, U13	SS-187	2	
16			4AMP F5, F6 F11, F12	FS-004LF	4	
15			.018UF 50V C37, C41	CYV-183	2	
14			47PF 100V C34, C35 C45, C46	CDC-470	4	
13			.001UF 50V C36, C47	CYV-102	2	
12			470PF 100V C38, C49	CDC-471	2	
11			100UF 25V C51, C52 C53, C54	CERC107A	4	
10			10UF 50V C33, C39, C40, C42 C43, C44, C48, C50	CERC106C	8	
9			1K OHM R18, R53	RV-102TP	2	
8			5K OHM R19, R59	RV-502TP	2	
7			10 OHM R17, R20	RM1-100	2	
6			3.92K OHM R50, R52 R54, R56	RMP/8-3921	4	
5			475 OHM R48, R62	RMP/8-4750	2	
4			274 OHM R49, R63	RMP/8-2740	2	
3			20K OHM R22, R51, R55 R57, R58, R61	RMP/8-2002	6	
2			2K OHM R21, R60	RMP/8-2001	2	
1			RCA J5, J6	HW-735G	2	

CORRECTIONS

DA	BY	CHANGE	SYM

DWN	D. SERNA	
CHK		
ENGR		
APVD		
APVD		

ROCKFORD FOSGATE CORPORATION DIVISION TEMPE AZ

TITLE: MSE120 CHANNELS 3 AND 4

SIZE C | SCALE NONE | SHEET 4 OF 4

MATL/FS | FILE NAME MSE120E | PART NO. SCH-MSE120 | REV E

REV E | FILE NAME MSE120E | PART NO. SCH-MSE120