CORD	REV	REVISION RECORD	AUTHORITY	DATE
	A	RELEASED	G.R.	7-29-91
	B		G.R.	8-7-91
	C		G.R.	8-7-91
	D	ECO 2789	WC	9-11-92

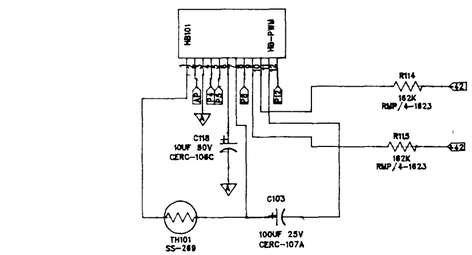

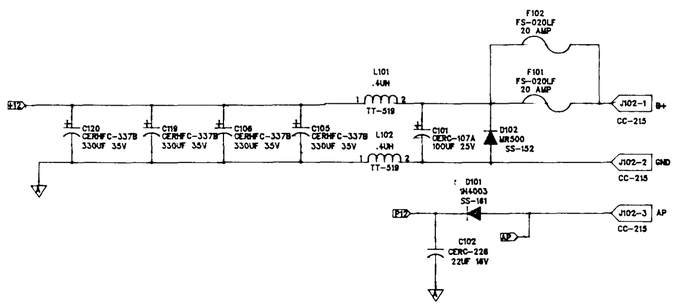

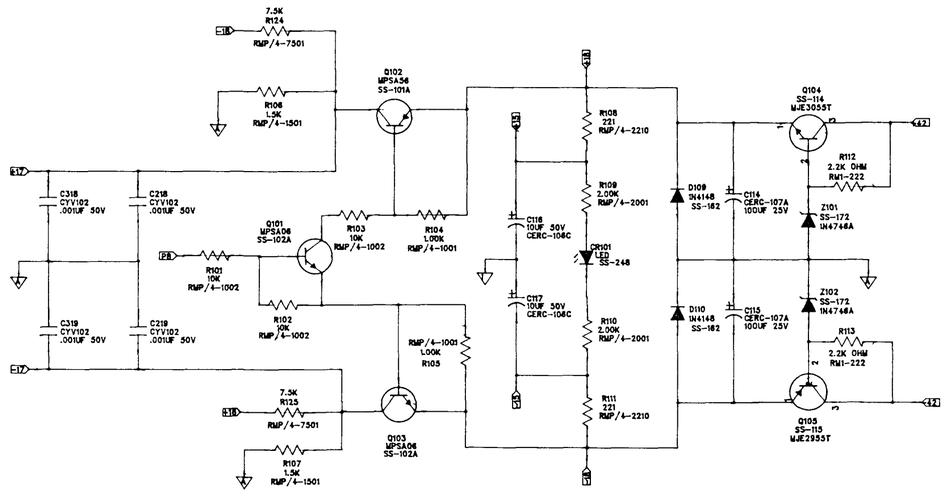

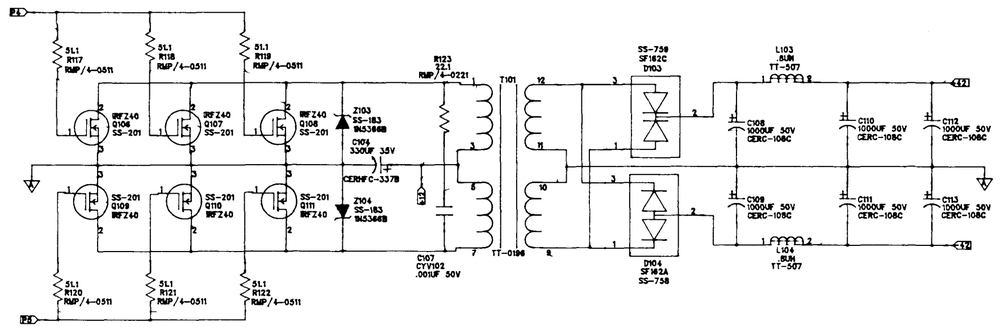

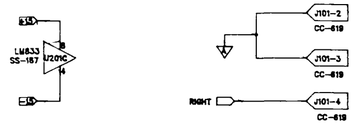

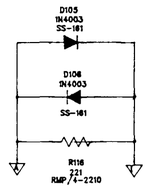

CONFIDENTIAL

© Copyright 19 92 Rockford Corporation. This drawing is the property of Rockford Corporation and embodies confidential information, trade secret information, and/or know-how which is the property of Rockford Corporation. By accepting this drawing, the recipient agrees not to provide, or otherwise make available, the drawing, or any information or know-how embodied therein, to any third party without prior written authorization.

DWN	ROCHELEAU	7-29-91	ROCKFORD FOSGATE CORPORATION DIVISION TEMPE AZ	
CHK	B.L.L	9/8/92		
ENGR	ROCHELEAU	7-29-91	TITLE SCHEMATIC POWER SUPPLY MSE200tn	
APVD	G.K.	9/92		
APVD		9-11-92	SIZE D	SCALE NONE SHEET 1 OF 3
MATL/FS			FILE NAME MSE200	PART NO. SCH-MSE200 REV D

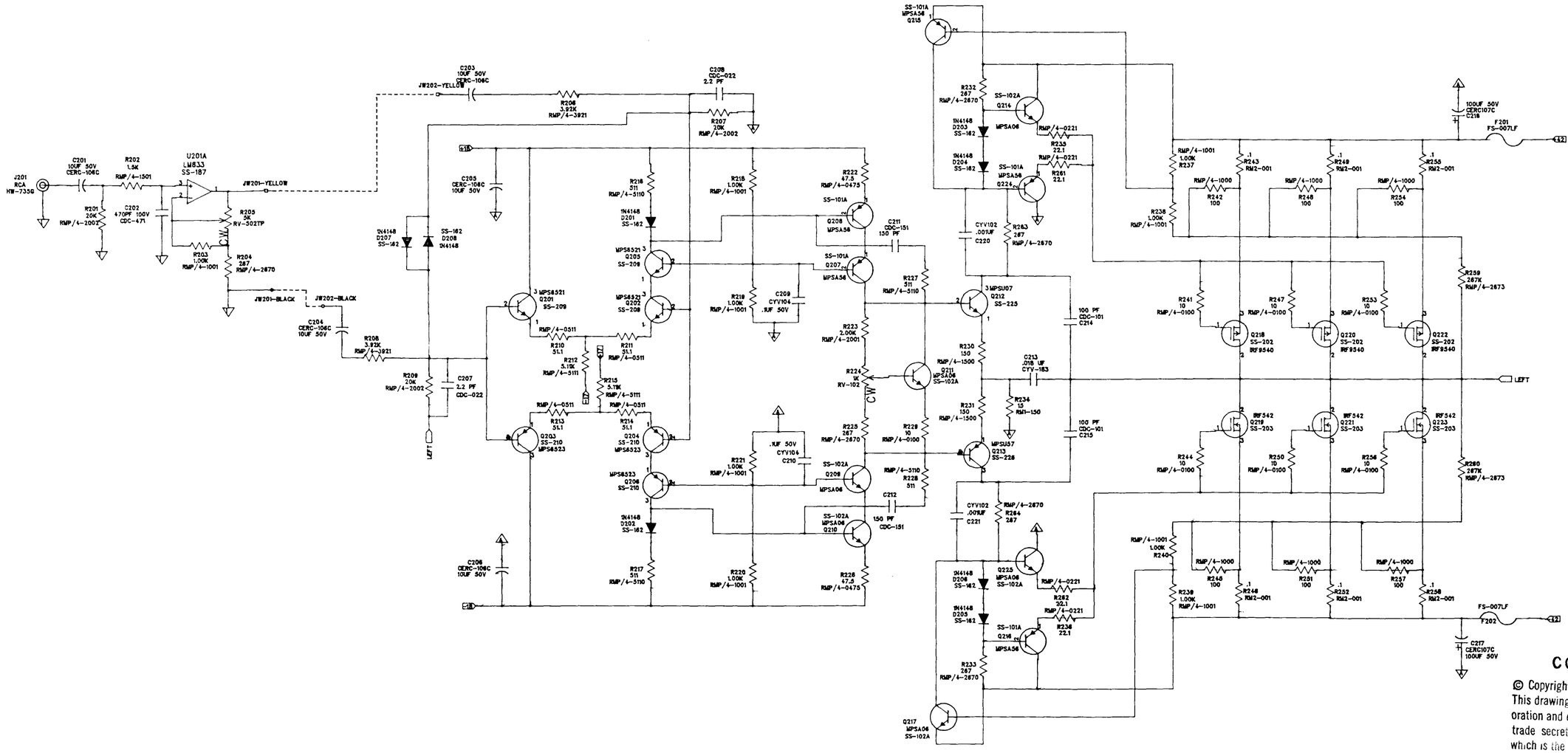

CONFIDENTIAL

© Copyright 19 92 Rockford Corporation. This drawing is the property of Rockford Corporation and embodies confidential information, trade secret information, and/or know-how which is the property of Rockford Corporation. By accepting this drawing, the recipient agrees not to provide, or otherwise make available, the drawing, or any information or know-how embodied therein, to any third party without prior written authorization.

DWN	Rocheleau	7/29/91	ROCKFORD FOSGATE CORPORATION DIVISION TEMPE AZ		
CHK					
ENGR	Rocheleau	7/29/91	TITLE: MSE200 LEFT CHANNEL		
APVD		9-11-91			
APVD			SIZE D	SCALE NONE	SHEET 2 OF 3
MATL/FS			FILE NAME: MSE200	PART NO.: SCH-MSE200	REV: D

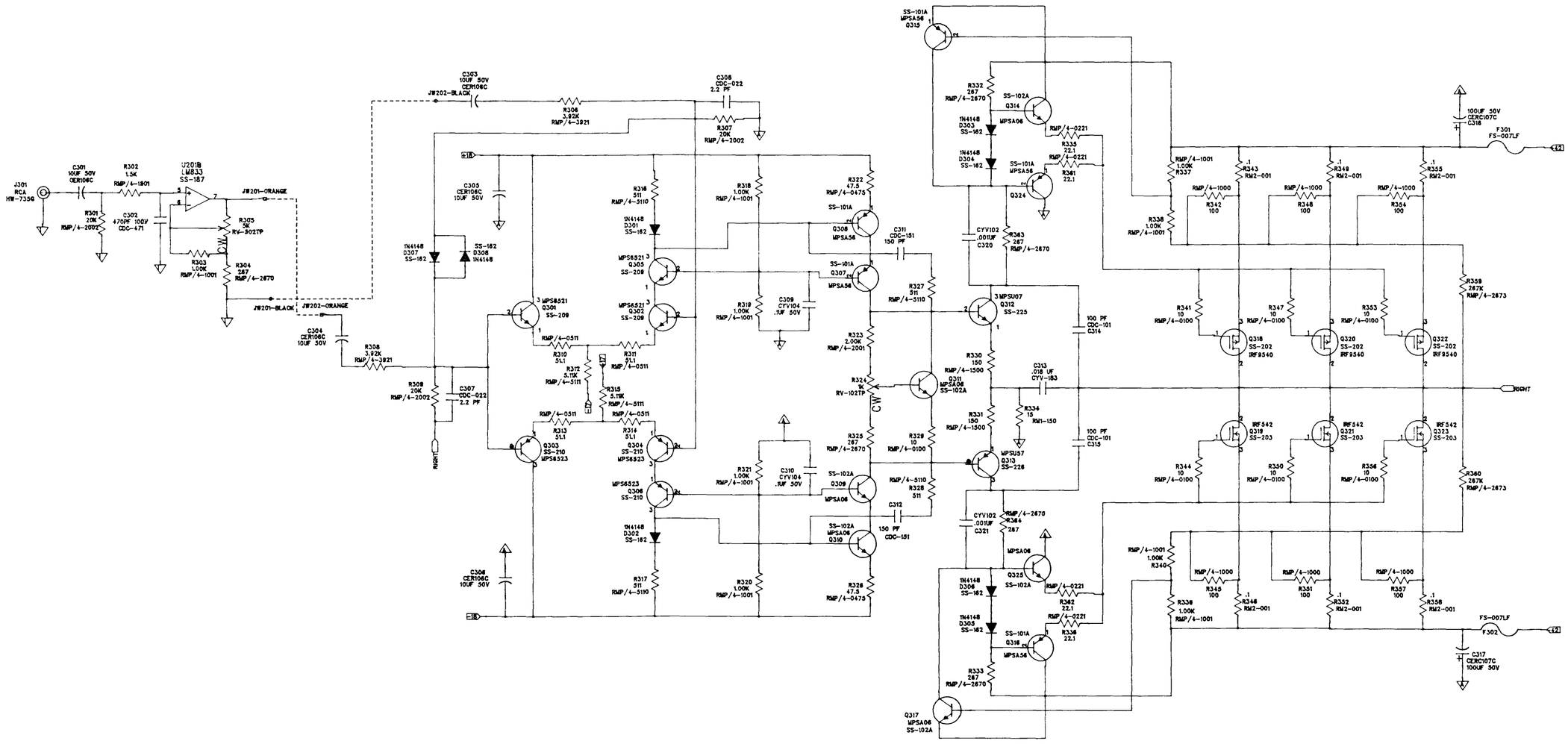

CONFIDENTIAL

© Copyright 19 92 Rockford Corporation. This drawing is the property of Rockford Corporation and embodies confidential information, trade secret information, and/or know-how which is the property of Rockford Corporation. By accepting this drawing, the recipient agrees not to provide, or otherwise make available, the drawing, or any information or know-how embodied therein, to any third party without prior written authorization.

DWN	Rocheleau	7/29/91	ROCKFORD FOSGATE CORPORATION DIVISION TEMPE AZ		
CHK					
ENGR	Rocheleau	7/29/91	TITLE SCHEMATIC RIGHT CHANNEL MSE200tn		
APVD					
APVD			SIZE D	SCALE NONE	SHEET 3 OF 3
MATL/FS			FILE NAME MSE200	PART NO. SCH-MSE200	REV D