CORD		REVISION RECORD		
	A	RELEASED	S.C.	10/11/90
	B		S.C.	12/90
	C	ECO: 0566, 0747, 1122, 1127 1131, 1159, 1166, 1189	D.F.	3/91
	D	ECO 5 & 6	S.C.	3/4/91
	E	ECO 2069	W.C.	1-92
	F	ECO 2085	W.C.	1-92
	G	ECO 2306	W.C.	1-92
	H	ECO 2329	W.C.	1-92
	I	ECO 2450	WC	5-92
	J	ECO 2474	WC	5-92
	K	ECO 2499	WC	5-92
	L	ECO 2639	WC	5-92
	M	ECO 2998	WC &	1-93

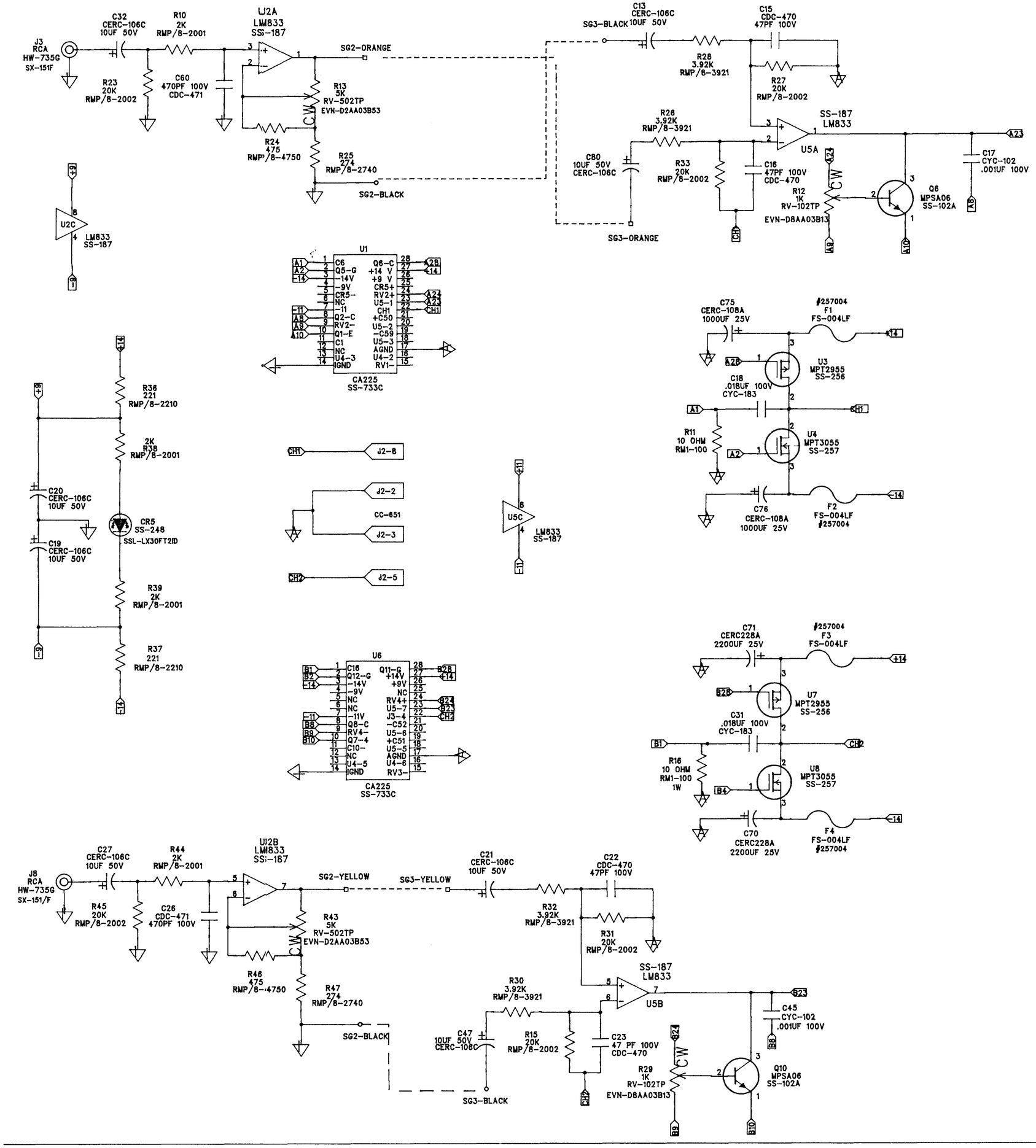

	R.C.	3/91	ROCKFORD TEMPE AZ	
	S.C. AT	3/90 3/92	SCHEMATIC MSE80di CH1 AND CH2 OUTPUT SECTIONS	
	WC	5-28-92	C	NONE SHEET1 OF 3
MATL/FNSH			MSE80	SCH-MSE80 M

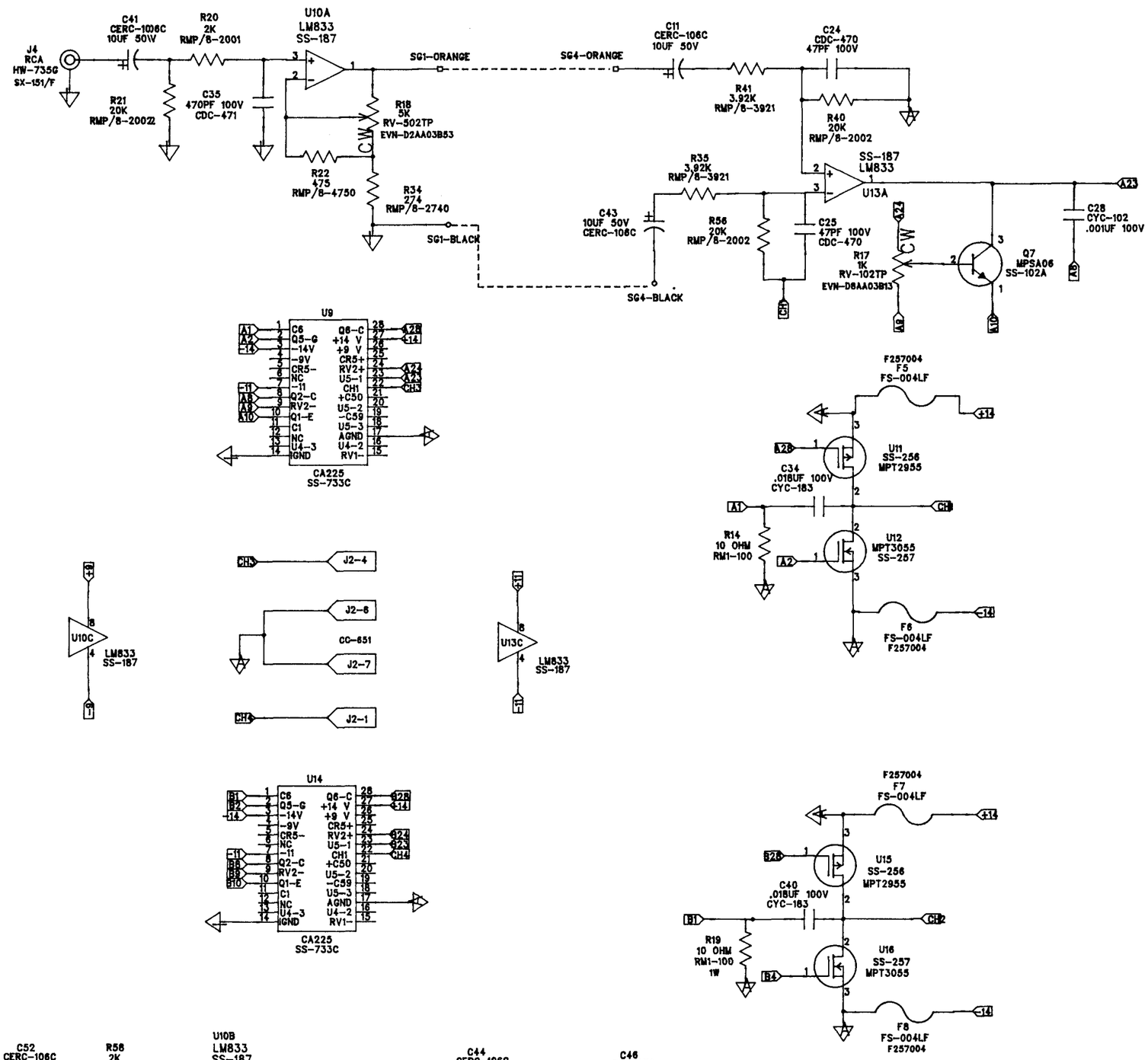

DWN	R.C.	3/91	ROCKFORD CORPORATION FOSGATE DIVISION TEMPE AZ
CHK		5/92	
ENGR	S.C.	3-90	TITLE SCHEMATIC MSE80di CH3 AND CH4 OUTPUT SECTIONS
APVD		5-92	
APVD			SIZE C / SCALE NONE / SHEET 2 OF 3
MATL/FNSH			FILE NAME MSE80 / PART NO. SCH-MSE80 / REV M

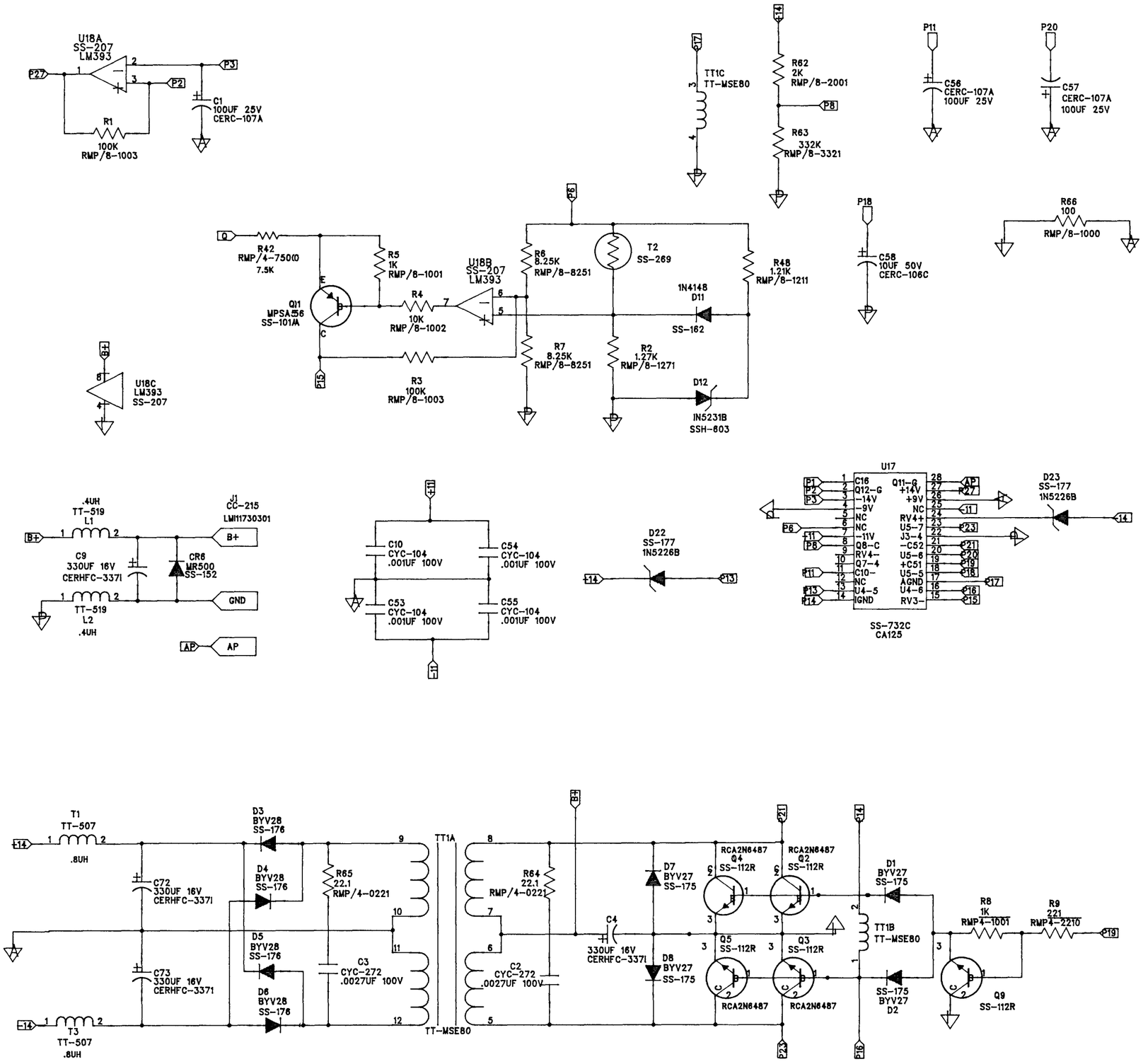

DWN	R.C.	3/20/91	ROCKFORD CORPORATION	
CHK	AT	5/92	FOSGATE DIVISION TEMPE AZ	
ENGR	S.C.	3/90	TITLE SCHEMATIC MSE80di POWER SUPPLY	
APVD	LC	5-92		
APVD			SIZE C	SCALE NONE SHEET 3 OF 3
MATL/FS			FILE NAME MSE80	PART NO. SCH-MSE80 REV M