Z	REV	DA	REVISION RECORD	AUTHORITY	DRAW	CHECK
	F	11/12	PRODUCTION RELEASE ECO 2952			

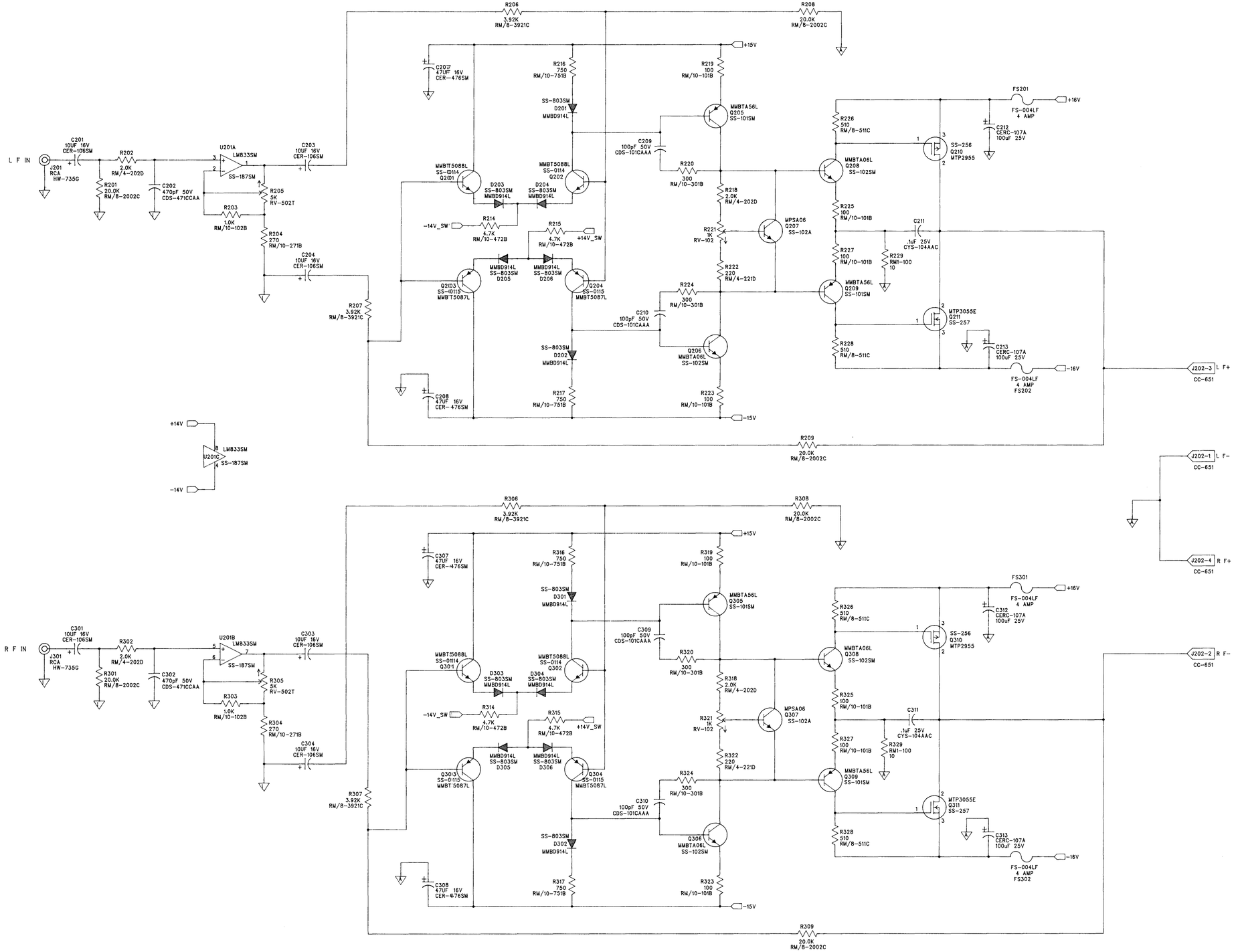

CONFIDENTIAL

© Copyright 19 92 Rockford Corporation. This drawing is the property of Rockford Corporation and embodies confidential information, trade secret information, and/or know-how which is the property of Rockford Corporation. By accepting this drawing, the recipient agrees not to provide, or otherwise make available, the drawing, or any information or know-how embodied therein, to any third party without prior written authorization.

DWN	G Rocheleau	11/13/92	ROCKFORD FOSGATE CORPORATION DIVISION TEMPE AZ		
CHK		11/21/92			
ENGR	G Rocheleau	11/13/92	TITLE MSE88tn FRONT OUTPUTS		
APVD		11/24/92			
APVD		11/25/92	SIZE D		SHEET 1 OF 3
MATL/FS			FILE NAME MSE88.SCH	PART NO. SCH-0107	REV F

PART NO. SCH-0107-F FILE NAME MSE88.SCH REV F

Z	REV	DA	REVISION RECORD	AUTHORITY	DRAW	CHECK
	F	11/92	PRODUCTION RELEASE ECO 2952			

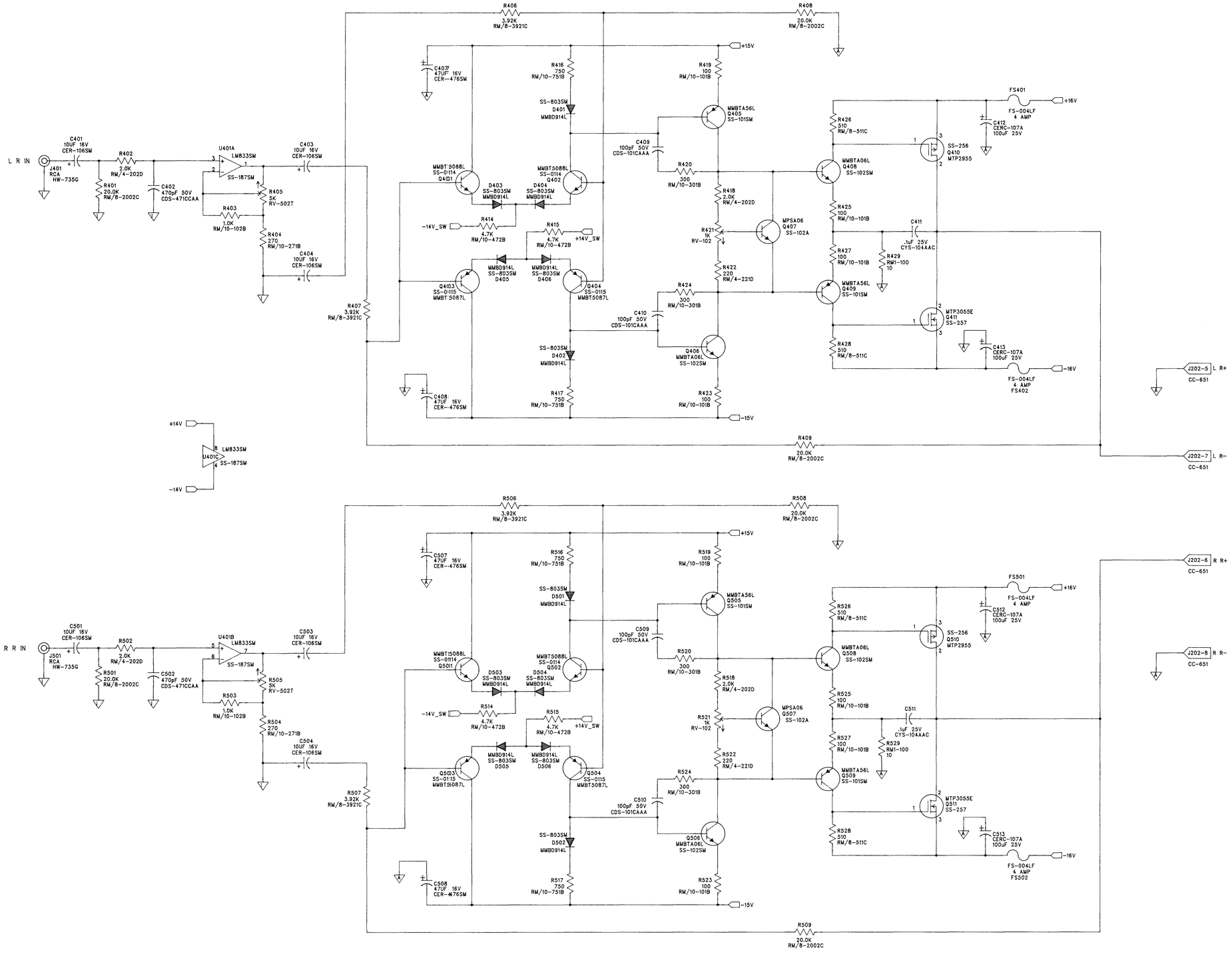

CONFIDENTIAL

© Copyright 19 92 Rockford Corporation. This drawing is the property of Rockford Corporation and embodies confidential information, trade secret information, and/or know-how which is the property of Rockford Corporation. By accepting this drawing, the recipient agrees not to provide, or otherwise make available, the drawing, or any information or know-how embodied therein, to any third party without prior written authorization.

DWN	G Rocheleau	11/24/92	ROCKFORD CORPORATION FOSGATE DIVISION TEMPE AZ	
CHK				
ENGR	G Rocheleau	11/24/92	TITLE	
APVD	G. R.	11/24/92	MSE88tn REAR OUTPUTS	
APVD		11/25/92	SIZE D	SHEET 2 OF 3
MATL/FS			FILE NAME MSE88.SCH	PART NO. SCH-0107 REV F

FILE NAME MSE88.SCH REV F PART NO. SCH-0107-F

Z	REV	DA	REVISION RECORD	AUTHORITY	DRAW	CHECK
	F	11/92	PRODUCTION RELEASE ECO 2952			

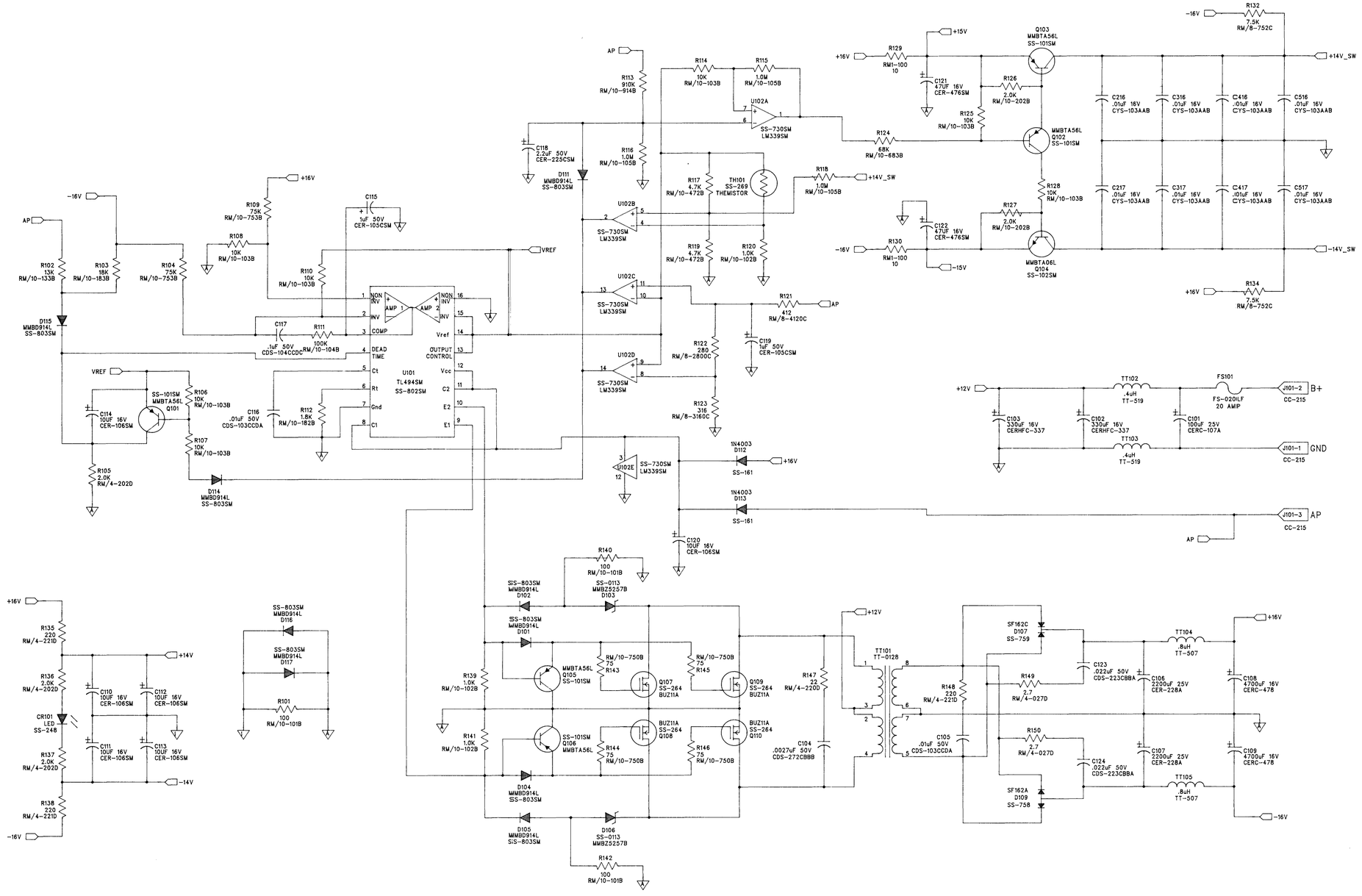

CONFIDENTIAL

© Copyright 19 92 Rockford Corporation. This drawing is the property of Rockford Corporation and embodies confidential information, trade secret information, and/or know-how which is the property of Rockford Corporation. By accepting this drawing, the recipient agrees not to provide, or otherwise make available, the drawing, or any information or know-how embodied therein, to any third party without prior written authorization.

DWN	G Rocheleau	11/24/92	ROCKFORD FOSGATE CORPORATION DIVISION TEMPE AZ
CHK			
ENGR	G Rocheleau	11/24/92	TITLE
APVD	C.R.	11/24/92	MSE88tn POWER SUPPLY
APVD		11/25/92	SIZE D — SHEET 3 OF 3
MATL/FS		FILE NAME MSE88.SCH	PART NO. SCH-0107 — REV F

PART NO. SCH-0107-F | FILE NAME MSE88.SCH | REV F