REVISION RECORD			
LTR	ECO NO:	APPROVED:	DATE:
B/PL	ECO NO. 1187	J. Pleitz	2-13-91
A/PLS	ECO NO. 4	J. Pleitz	3-14-91

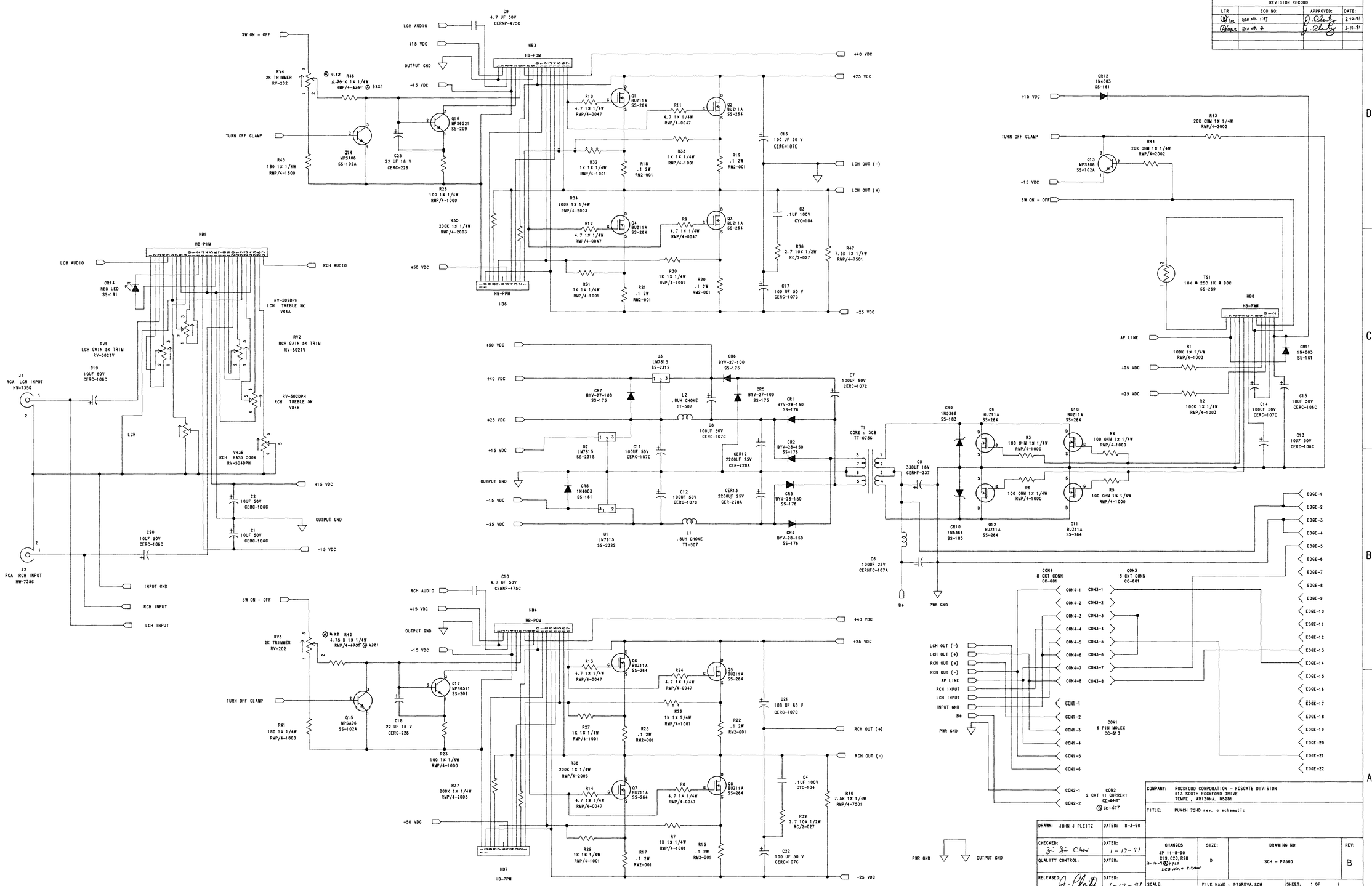

COMPANY:	ROCKFORD CORPORATION - FOSGATE DIVISION 613 SOUTH ROCKFORD DRIVE TEMPE , ARIZONA. 85281		
TITLE:	PUNCH 75HD rev. e schematic		
DRAWN: JOHN J PLEITZ	DATED: 8-3-90		
CHECKED: Zi Ji Chen	DATED: 1-17-91		
QUALITY CONTROL:	DATED:		
RELEASED: J. Pleitz	DATED: 1-17-91		
CHANGES: JP 11-8-90 C19, C20, R28 3-14-91 PLS Eco no. 4	SIZE: D	DRAWING NO: SCH - P75HD	REV: B
SCALE:	FILE NAME : P75REVA.SCH	SHEET: 1 OF 1	