NOTES: UNLESS SPECIFIED OTHERWISE
1. ALL RESISTORS IN OHMS
2. ALL CAPACITORS IN MICROFARADS

| Z | SYM | DA | REVISION RECORD | AUTHORITY | DRAW | CHECK |
|---|---|---|---|---|---|---|
| | | | RELEASED | | | |

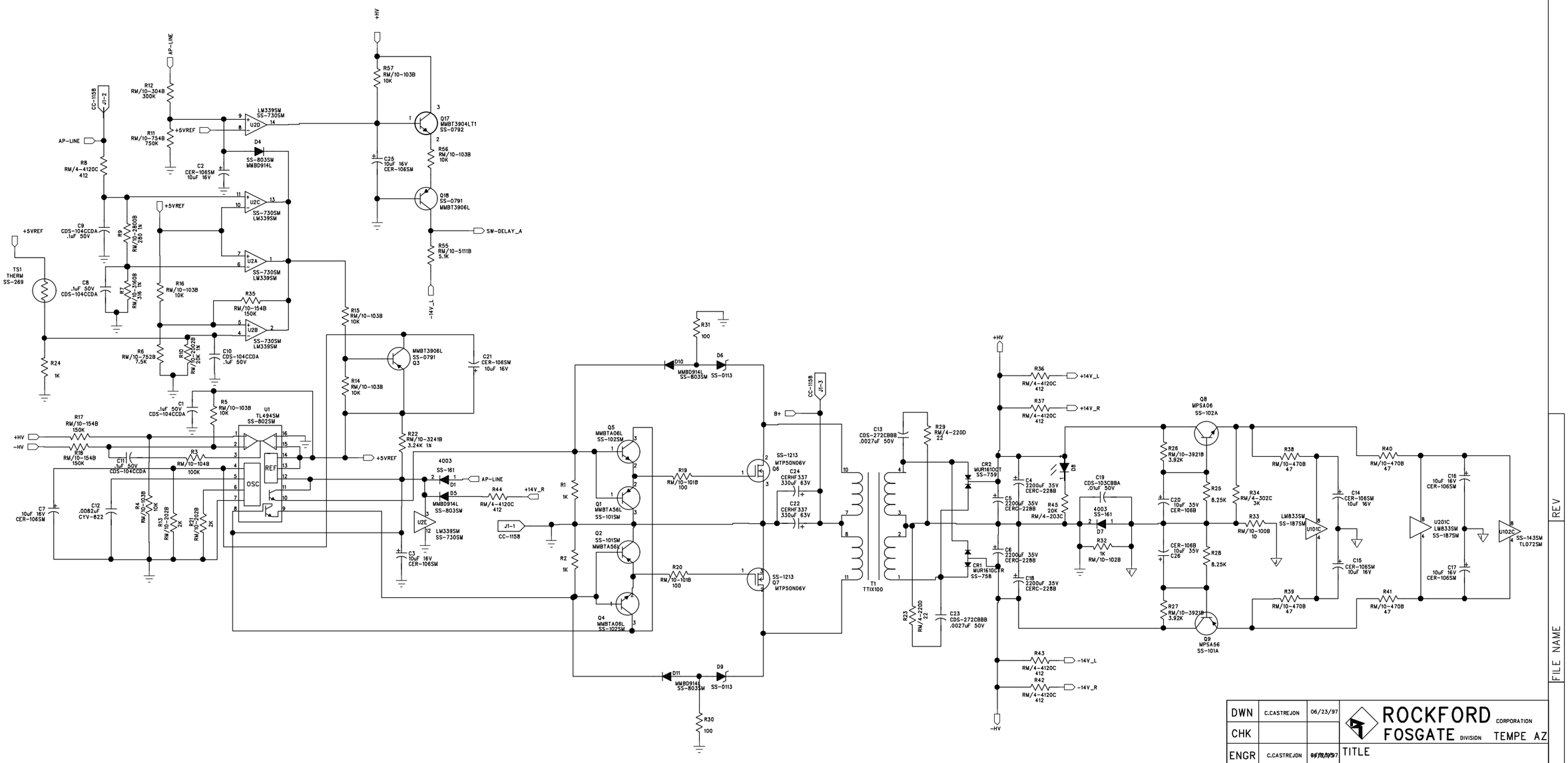


| | | | |
|---|---|---|---|
| DWN | C.CASTREJON | 06/23/97 | ROCKFORD FOSGATE CORPORATION DIVISION TEMPE AZ |
| CHK | | | |
| ENGR | C.CASTREJON | 06/23/97 | TITLE: RF 2.9 AMPLIFIER POWER SUPPLY |
| APVD | | | SIZE: — SCALE: — SHEET 1 OF 3 |
| APVD | | | |
| MATL/FS | | | FILE NAME: PC-1747-B PART NO.: — REV: B |

REV | FILE NAME | PART NO.

NOTES: UNLESS SPECIFIED OTHERWISE
1. ALL RESISTORS IN OHMS
2. ALL CAPACITORS IN MICROFARADS

| Z | SYM | DA | REVISION RECORD | AUTHORITY | DRAW | CHECK |
|---|---|---|---|---|---|---|
| | | | RELEASED | | | |

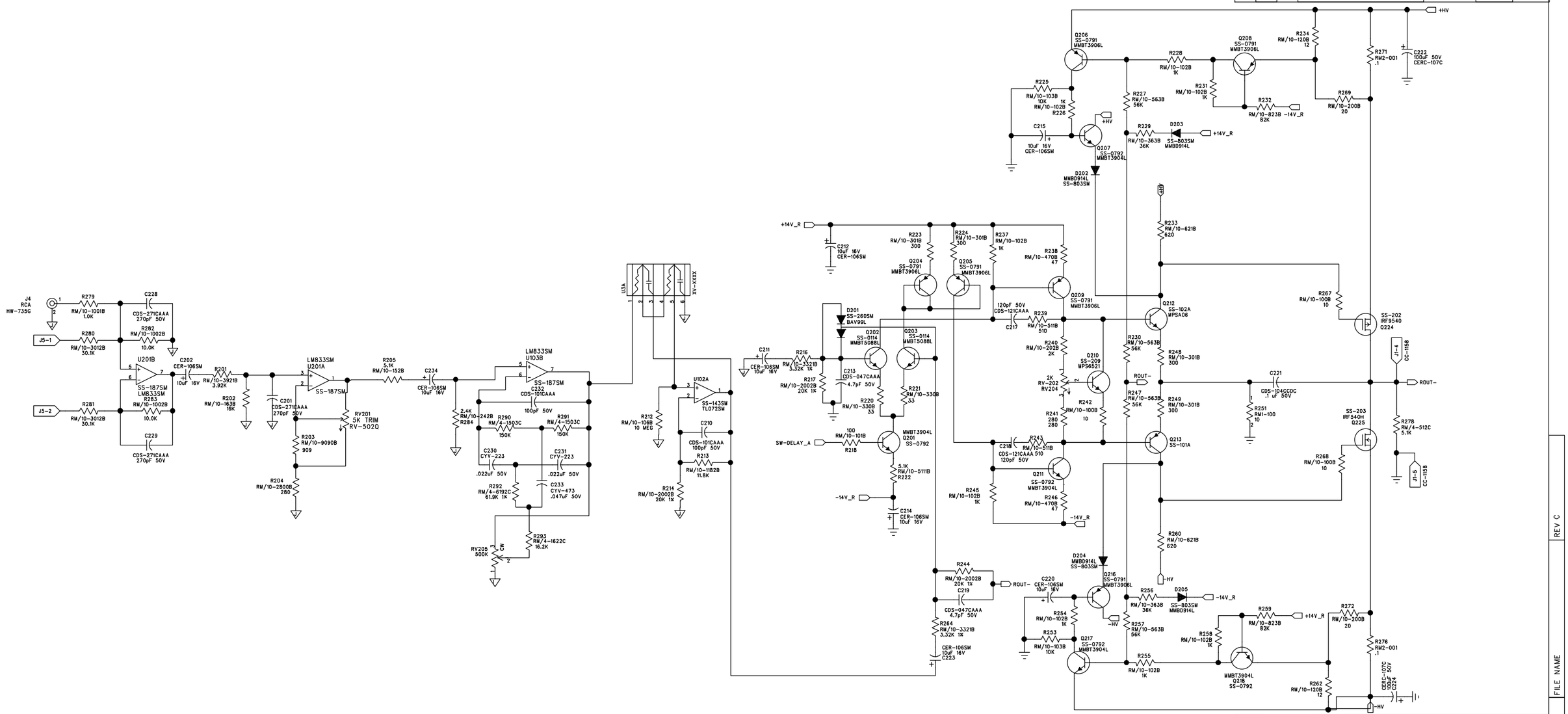


| | | | |
|---|---|---|---|
| DWN | C.CASTREJON | 06/23/97 | ROCKFORD FOSGATE CORPORATION DIVISION TEMPE AZ |
| CHK | | | |
| ENGR | C.CASTREJON | 06/23/97 | TITLE: RF2.9 RIGHT CHANNEL |
| APVD | | | |
| APVD | | | SIZE D — SHEET 3 OF 3 |
| MATL/FS | | | FILE NAME: PC-1747-B — PART NO. — REV: B |

REV C | FILE NAME | PART NO.

NOTES: UNLESS SPECIFIED OTHERWISE
1. ALL RESISTORS IN OHMS
2. ALL CAPACITORS IN MICROFARADS

| Z | SYM | DA | REVISION RECORD | AUTHORITY | DRAW | CHECK |
|---|---|---|---|---|---|---|
| | | | RELEASED | | | |

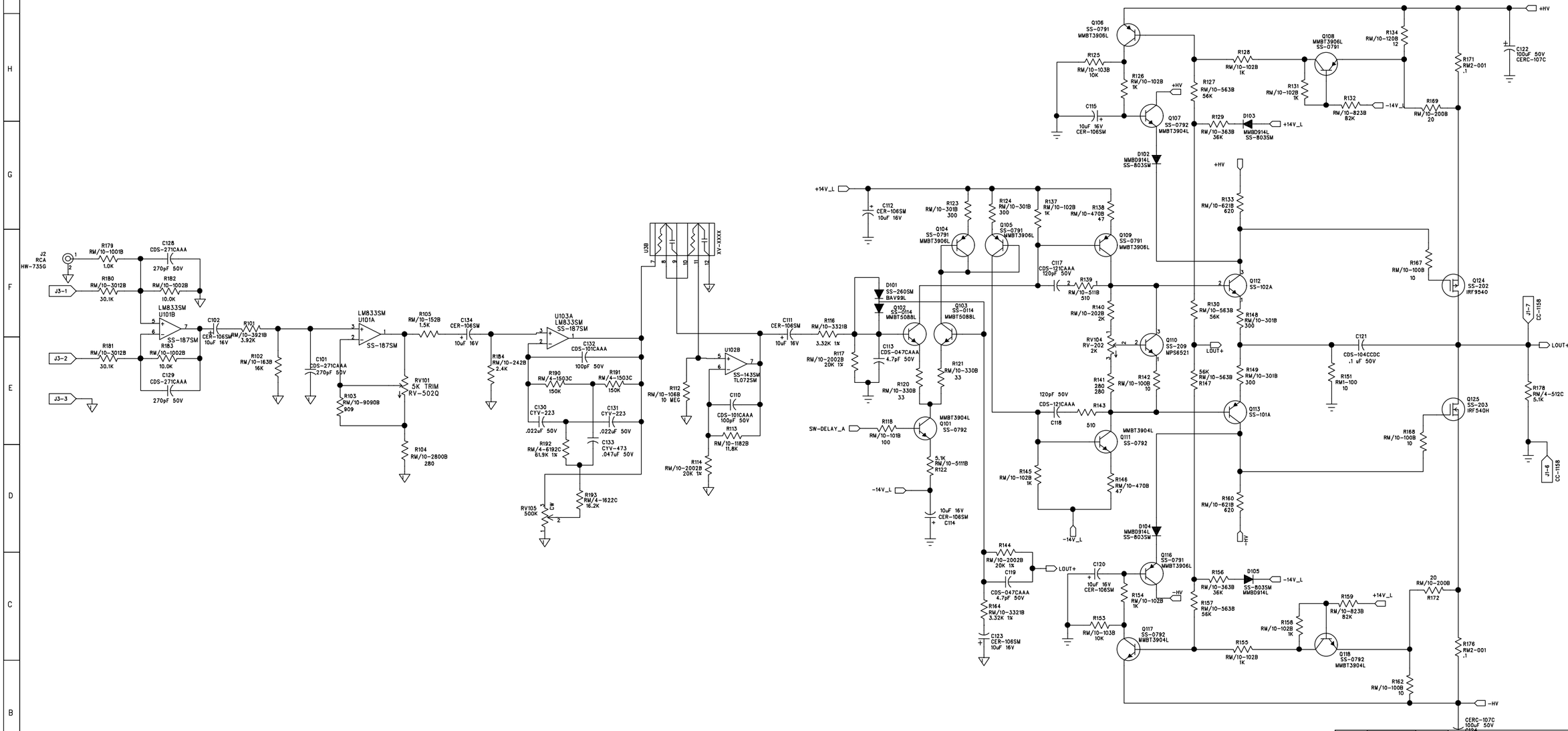


| | | | |
|---|---|---|---|
| DWN | C.CASTREJON | 06/23/97 | ROCKFORD FOSGATE CORPORATION DIVISION TEMPE AZ |
| CHK | | | |
| ENGR | C.CASTREJON | 06/23/97 | TITLE: RF2.9 LEFT CHANNEL |
| APVD | | | |
| APVD | | | SIZE D — SHEET 2 OF 3 |
| MATL/FS | | | FILE NAME: PC-1747B — PART NO. — REV: B |

REV B | FILE NAME | PART NO.