PIONEER

SX-636 KCU GN FV

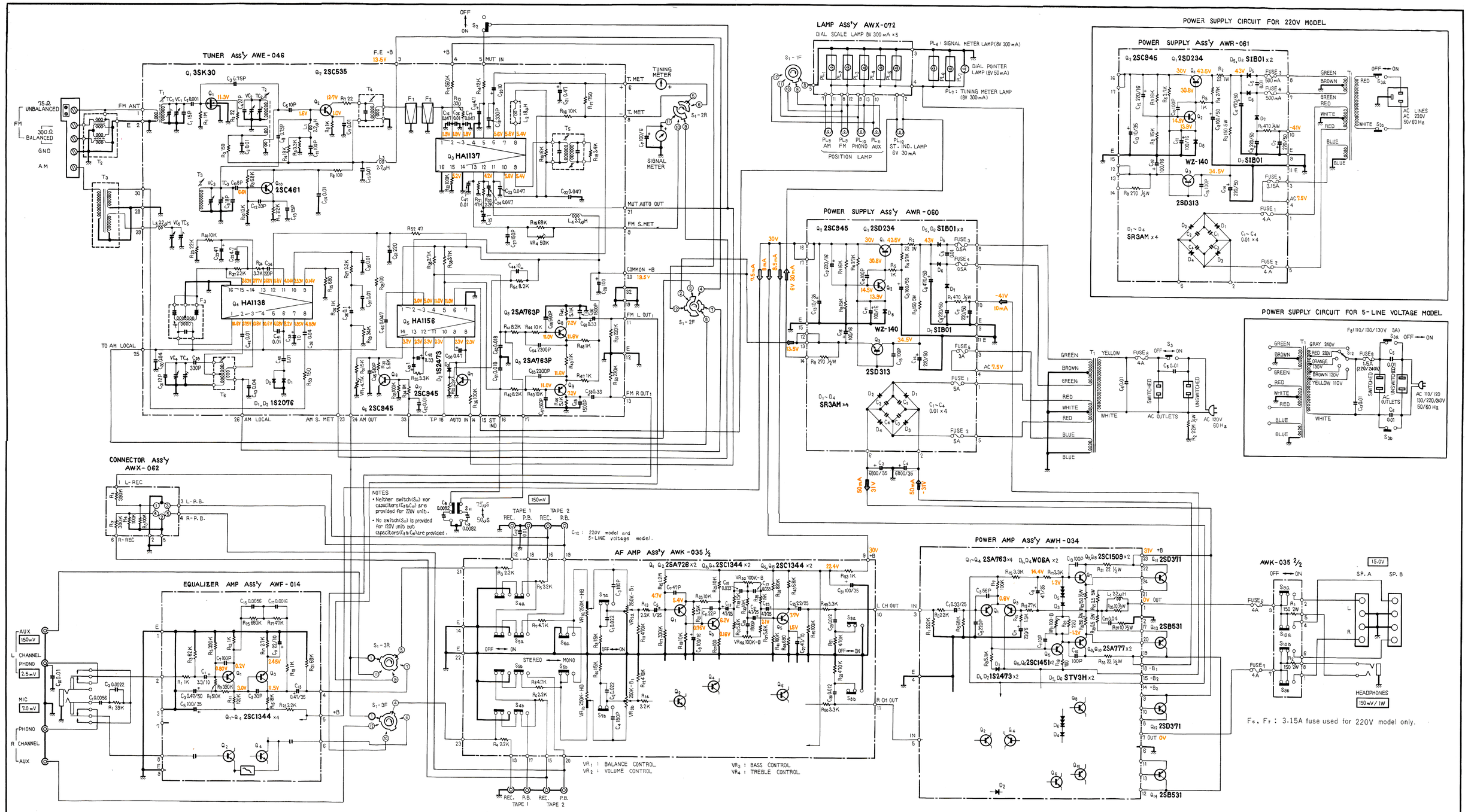

SWITCHES

S_1 : FUNCTION
1. AM
2. FM
3. PHONO/MIC
4. AUX

S_2 : FM MUTING ON ⟷ OFF

S_3 : POWER SWITCH OFF ⟷ ON

S_4 : TAPE MONITOR 1 OFF ⟷ ON

S_5 : TAPE MONITOR 2 OFF ⟷ ON

S_6 : MODE STEREO ⟷ MONO

S_7 : LOUDNESS OFF ⟷ ON

S_8 : HIGH FILTER OFF ⟷ ON

S_9 : SPEAKER A OFF ⟷ ON

S_{10} : SPEAKER B OFF ⟷ ON

S_{11} : DE-EMPHASIS 50μS ⟷ 75μS

RESISTORS
IN OHM, ¼W, ±5% TOLERANCE UNLESS OTHERWISE NOTED. K=KΩ, M=MΩ.

CAPACITORS
IN μF UNLESS OTHERWISE NOTED. P=pF
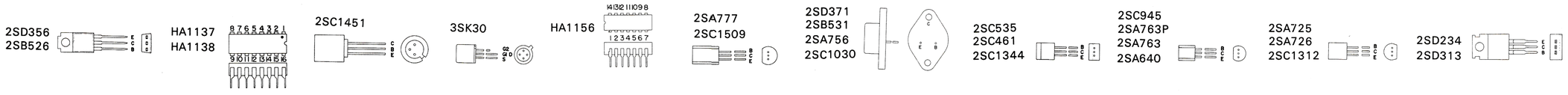
NOTES
▭ V : SIGNAL VOLTAGE NECESSARY FOR OBTAINING 28W/8Ω OUTPUT POWER (1KHz).
V : DC VOLTAGE AT NO INPUT SIGNAL.
⇦ A : DC CURRENT AT NO INPUT SIGNAL.