ADDITIONAL

Service Manual

PIONEER®

ORDER NO.
ARP-408-0

FM/AM DIGITAL SYNTHESIZED TUNER

TX-05 KU

- This additional service manual is applicable to the KU type (U.S.A. model).
- The basic performance of the model TX-05 is the same as the model TX-05L. The AM tuner of TX-05 is a medium wave-band only. The TX-05L is two wave-band (medium wave-band and long wave band). Please refer to the TX-05L service manual (ARP-134) with the exception of this service manual.

SPECIFICATIONS

FM Tuner Section

Frequency Range	88 MHz ~ 108 MHz
Usable Sensitivity	10.8 dBf (0,95 μV) 75Ω
50 dB Quieting Sensitivity	Mono; 17.3 dBf (4.0 μV) 75 Ω Stereo; 39.2 dBf (50 μV)
Signal-to-Noise Ratio	Mono; 75 dB (at 85 dBf) Stereo; 70 dB (at 85 dBf)
Distortion (at 65 dBf)	
Mono	1 kHz; 0.1%
Stereo	1 kHz; 0.2%
Capture Ratio	1.0 dB
Alternate Channel Selectivity	400 kHz; 50 dB
Stereo Separation	1 kHz; 40 dB 100 Hz to 10 kHz; 40 dB
Frequency Response	20 Hz to 15 kHz $^{+0.2}_{-1.0}$ dB
Spurious Response Ratio	70 dB
Image Response Ratio	40 dB
IF Response Ratio	80 dB
Antenna Input	300 ohms balanced, 75 ohms unbalanced

AM Tuner Section

Frequency Range	530 kHz ~ 1,600 kHz
Sensitivity (IHF, external antenna)	30 μV
Selectivity	25 dB
Signal-to-Noise Ratio	45 dB
Image Response Ratio	40 dB
IF Response Ratio	60 dB
Antenna	Loop antenna

Audio Section

FM (100% MOD)	650 mV/2.2 kΩ
AM (30% MOD)	190 mV/2.2 kΩ

Miscellaneous

Power Requirements	
KU model	AC 120V, 60Hz
Power Consumption	14.5 W
Dimensions	420(W) X 67(H) X 225(D) mm 16-9/19(W) X 2-5/8(H) X 8-7/8(D) in
Weight (without package)	2.9 kg (6 lb 6 oz)

Furnished Parts

FM T-type Antenna	1
AM Loop Antenna	1
Antenna Catcher	1
Connection Cord with Pin Plugs	1
Station Cards	1 set
Operating Instructions	1

NOTE:
Specifications and design subject to possible modification without notice, due to improvements.

PIONEER ELECTRONIC CORPORATION 4-1, Meguro 1-Chome, Meguro-ku, Tokyo 153, Japan
PIONEER ELECTRONICS (USA) INC. 1925 E. Dominguez St., Long Beach, California 90810 U.S.A.
PIONEER ELECTRONIC (EUROPE) N.V. Keetberglaan 1, 2740 Beveren, Belgium
PIONEER ELECTRONICS AUSTRALIA PTY. LTD. 178-184 Boundary Road, Braeside, Victoria 3195, Australia

JULY 1983 Printed in Japan

www.hifiengine.com

PARTS LIST

NOTES:

- *When ordering resistors, first convert resistance values into code form as shown in the following examples.*

  Ex.1 When there are 2 effective digits (any digit apart from 0), such as 560 ohm and 47k ohm (tolerance is shown by J = 5%, and K = 10%).

560Ω	*56 x 10^1*	*561*	*RD¼PS 5 6 1 J*
47kΩ	*47 x 10^3*	*473*	*RD¼PS 4 7 3 J*
0.5Ω	*0R5*		*RN2H 0 R 5 K*
1Ω	*010*		*RS1P 0 1 0 K*

  Ex. 2 When there are 3 effective digits (such as in high precision metal film resistors).

5.62kΩ	*562 x 100*	*5621*	*RN¼SR 5 6 2 1 F*

- *The ⚠ mark found on some component parts indicates the importance of the safety factor of the part. Therefore, when replacing, be sure to use parts of identical designation.*
- *For your Parts Stock Control, the fast moving items are indicated with the marks ★★ and ★.*
  ★★ GENERALLY MOVES FASTER THAN ★.
  This classification shall be adjusted by each distributor because it depends on model number, temperature, humidity, etc.

Contrast of Parts

EXPLODED VIEW

Mark	No.	Description	Part No. TX-05L/HE	Part No. TX-05/KU	Remarks
	2	Panel stay assembly	ANR-505	ANR-489	
	6	Front panel assembly	ANM-216	ANM-115	
	10	Top cover	ANE-394	ANE-371	
⚠ ★	11	Power transformer (220V, 240V)	ATT-906	.....	
		Power transformer (120V)	.....	ATT-916	
	13	Tuner assembly	AWM-430	GWE-215	
		AM CH. Step switch assembly	.....	no supply	
⚠	14	AC power cord	ADG-062	ADG-073	
	53	Switch assembly	no supply	no supply	POWER, FM MUTING
	54	Control assembly	no supply	GWX-933	
	55	Battery assembly	no supply	no supply	
	53–55	Complex assembly	AWM-429	no supply	

OTHERS

Mark	Symbol & Description	Part No. TX-05L/HE	Part No. TX-05/KU	Remarks
	C101	CKDYF 473Z 50	.....	
⚠	R Resistor (2.2M, ½W)	.....	ACN-029	

PACKING AND FURNISHED PARTS

Mark	No.	Description	Part No. TX-05L/HE	Part No. TX-05/KU	Remarks
	4	Station card set	AAN-056	AAN-064	
	5	Operating instructions			
		(English/German/French/Italian)	ARE-042	.....	
		(English)	.....	ARB-507	
	9	Packing case	AHE-056	AHE-256	

www.hifiengine.com

Tuner Assembly (GWE-215)

CAPACITORS

Mark	Part No.	Symbol & Description	
	ACM-014	TC1–TC3	Ceramic trimmer
	ACM-015	TC4–TC5	Ceramic trimmer
	ACG-023	C14	Ceramic 390p/50V
	CCPSL 1R8M 50	C122	
	CCPSL 010M 50	C120	
	CCPSL 2R2K 50	C107	
	CCPCH 3R3K 50	C109	
	CCPCH 8R2K 50	C117	
	CKPYX 223N 25S	C140	
	CQSA 431J 50	C204	
	CCDRH 050C 50	C101	
	CCDRH 060D 50	C106	
	CCDTH 050C 50	C118	
	CCDTH 150J 50	C205	
	CCDCH 010C 50	C110	
	CCDCH 020C 50	C202	
	CCDCH 150J 50	C103, C115	
	CCDCH 330J 50	C116	
	CCDSL 101J 50	C108, C135	
	CKDYB 102K 50	C210, C215	
	CKDYB 222K 50	C3, C4	
	CKDYF 103Z 50	C102, C104, C105, C111, C112, C113, C119, C121, C124, C125, C126, C128, C129, C143, C203, C207, C208, C211, C213	
	CKDYF 223Z 50	C130–C132, C134, C137, C141, C142, C214, C217, C218	
	CKDYF 473Z 50	C16, C19, C201, C209, C216, C219	
	CEA 0R1M 50L	C206	
	CEA R47M 50L	C12, C220	
	CEA 010M 50L	C10, C11, C133, C138	
	CEA 3R3M 50L	C7, C8, C222	
	CEA 4R7M 50L	C5, C6, C13, C18, C223	
	CEA 100M 50L	C139, C212	
	CEA 220M 25L	C1, C9	
	CEA 470M 25L	C17, C221	
	CEA 101M 25L	C15, C114, C136	
	CEA 221M 16L	C2	

RESISTORS

Note: When ordering resistors, convert the resistance value into code form, and then rewrite the part no. as before.

Mark	Part No.	Symbol & Description	
★	ACP-093	VR1	Semi-fixed 20k-B
★	ACP-092	VR2	Semi-fixed 10k-B
	RN¼PQ 1802F	R22	
	RD1/8PM □□□ J	R1–R16, R18–R21, R23–R28, R101–R132, R137–R140, R201–R216	

SEMICONDUCTORS

Mark	Part No.	Symbol & Description
★★	PA3001-A	Q7
★★	PA4006-A	Q11
★★	LA1247	Q8
★★	2SK168	Q1, Q4, Q5
★★	2SC535	Q2
★★	2SC461	Q3, Q6
★★	2SC1845	Q10
★★	2SC2458	Q9
★	1SV68-08	D1–D3
★	KV1226-Y	D4
★	US1035 (1S2076)	D6–D13

* KV1226-Y consists of two vari-cap diodes with indentical characteristics.

COILS AND FILTERS

Mark	Part No.	Symbol & Description	
	ATC-163	L1	FM ANT. coil
	ATC-164	L2	FM RF coil
	ATC-165	L3	FM osc. coil
	ATH-049	L4–L6	RF choke coil
	ATE-053	T1	FM IF transformer
	ATE-057	T2	FM DET transformer
	ATB-081	T3	AM-MW ANT. coil
	ATB-073	T4	AM-MW osc. coil
	ATF-107	F1, F2	FM ceramic filter
	ATF-133	F3	AM ceramic filter
	ATF-131	F4	Beat elimination filter
	ATF-089	F5, F6	Low-pass filter
★	ATF-125	X1	Ceramic resonator

OTHERS

Mark	Part No.	Symbol & Description
	AKA-017	Terminal (ANTENNA)
	AKB-077	Terminal (OUTPUT)

AM CH. Step Switch Assembly

Mark	Part No.	Symbol & Description	
★★	ASH-028	S401	Slide switch (AM CHANNEL STEP)
	RD1/8PM 104J	R104	

Switch Assembly

Mark	Part No.	Symbol & Description	
★★	ASG-538	S1	Push switch (POWER, MUTING)
★	MZ-130	D502	
★	US1035 (IS2076)	D502	

www.hiflengine.com

Control Assembly (GWX-933)

CAPACITORS

Mark	Part No.	Symbol & Description
⚠	CEA 222M 16L	C1, C2
	CEA 0R1M 50L	C206
	CEA 101M 50L	C107
	CEA 100M 50L	C12, C13, C301
	CEA 101M 25L	C5
	CEA 101M 35L	C3, C7
	CEA 1R5M 50L	C204
	CEA 221M 10L	C101
	CEA R47M 50L	C4
	CEA 470M 50L	C9, C14
	CEA 6R8M 50L	C6
	CKDYB 331K 50	C105
	CKDYB 102K 50	C10, C106
	CKDYF 103Z 50	C203, C205, C207–C211
	CKDYF 473Z 50	C103, C104, C108
	CKDYX 473M 50	C11, C302
	CCDCH 150J 50	C201, C202

RESISTORS

Note: When ordering resistors, convert the resistance value into code form, and then rewrite the part no. as before.

Mark	Part No.	Symbol & Description
	RD¼PM □□□J	R18–R20, R230, R316, R317
	RD1/8PM □□□J	R1, R2, R5–R17, R21, R28, R101–R126, R201–R229, R301–R306, R308–R315, R319–R323

SEMICONDUCTORS

Mark	Part No.	Symbol & Description
★★	PD6004B	Q106
★★	TD6301AP	Q205
★★	M54922P	Q204
★★	TC4069UBP	Q105
★★	TC4049BP	Q104
★★	2SK373-Y	Q601
★★	M74LS42P	Q305
★★	IR2E01	Q304
★★	2SC2458	Q1, Q3, Q6, Q9, Q101, Q103, Q108, Q201, Q202, Q203, Q301, Q302, Q303, Q307
★★	2SA1048	Q7, Q8, Q102, Q107
★★	2SD836A	Q2
★★	2SD880	Q4, Q5
⚠ ★	10E2FD	D1, D2, D6
★	KZL056	D7, C108
★	KZL061	D10
★	KZL075	D8
★	MZ-110	D13
★	MZ-320	D9
★	MZ-081	D310
★	US1035 (1S2076)	D3–D5, D11, D12, D14, D15, D101–D107, D109, D313
★	2-1K261	D110–D112, D302–D309
★	AEL-383	DL301, DL303–D316 LED (Green)
★	AEL-388	DL302 LED (Red)
★	AEL-395	DL317 LED numeric display

OTHERS

Mark	Part No.	Symbol & Description
★	ASS-018	X1 Crystal resonator
★	ASS-019	X2 Ceramic resonator
	AKH-022	IC socket 22-P
★★	ASG-703	S2–S15 Tact switch
	VBZ30P060FMC	Screw (3 x 6)

Battery Assembly

The battery assembly for TX-05/KU is the same as the TX-05L/HE.

PRECAUTIONS ON LITHIUM BATTERY

1. Solder it at the ends of the leads prewelded to the battery in the factory.
2. Be sure to use it within the specified temperature limits. (100°C)
3. Do not short the battery.
   Do not dispose it in fire.
   Do not try to recharge it.
   Do not mis-connect its polarity (+/–).
   Do not disassemble it.
   Do not expose it to water.
4. Please refer to the schematic diagram when replacing it.

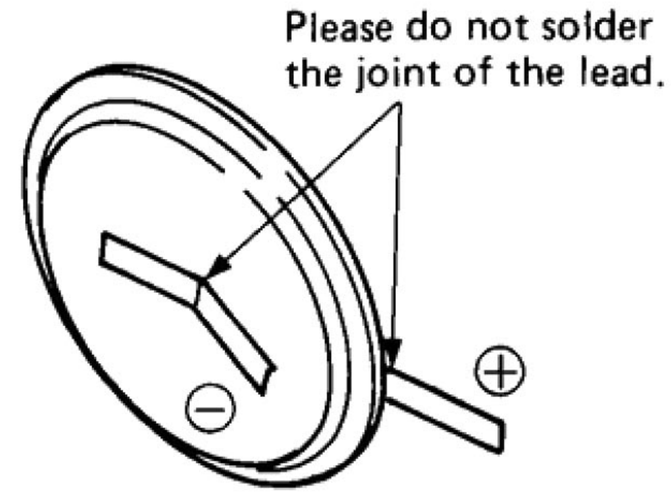

Lithium Battery (AEX-008)

www.hifiengine.com

P.C. BOARD PATTERNS

CONTROL ASSEMBLY (GWX-933)

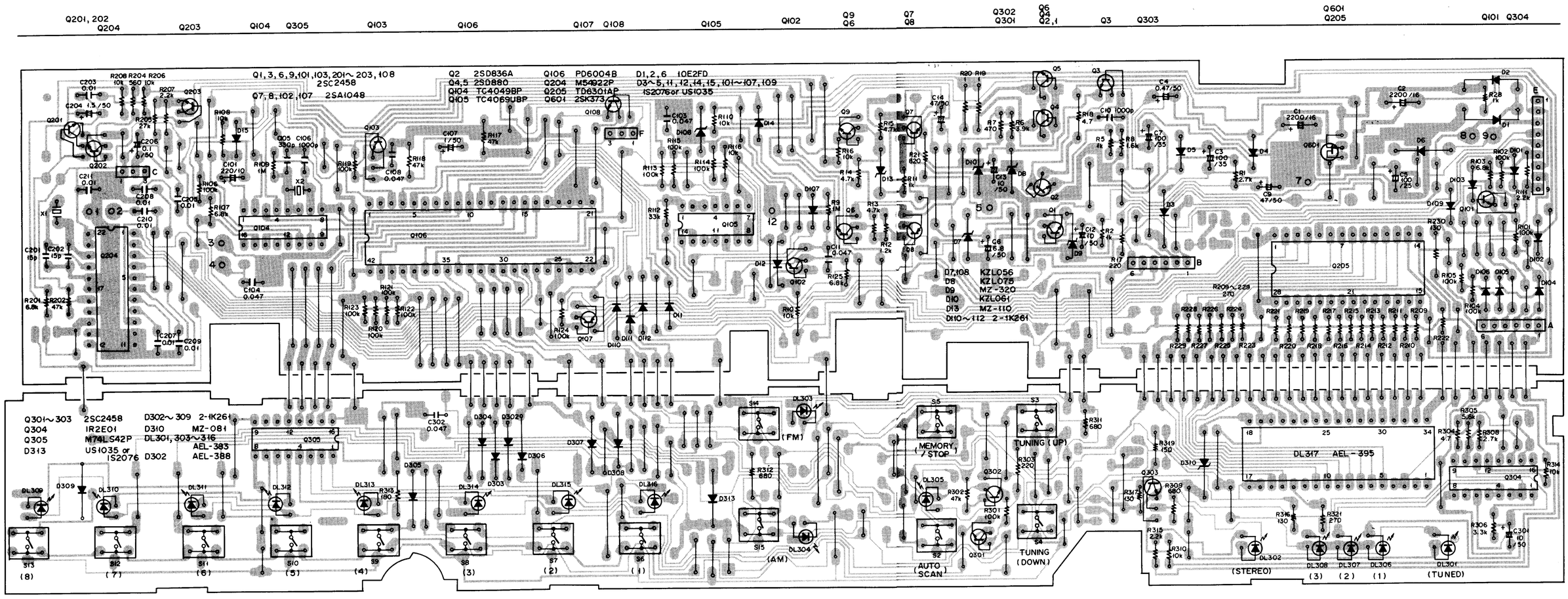

BATTERY ASSEMBLY

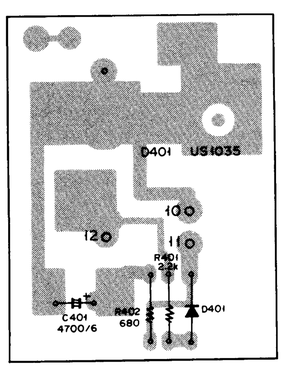

SWITCH ASSEMBLY

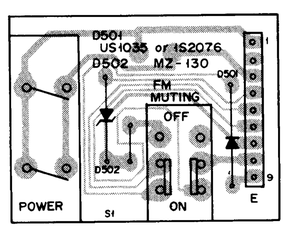

AM CH. STEP SWITCH ASSEMBLY

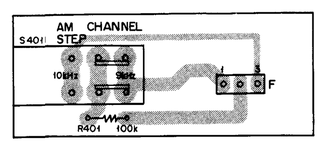

TUNER ASSEMBLY (GWE-215)

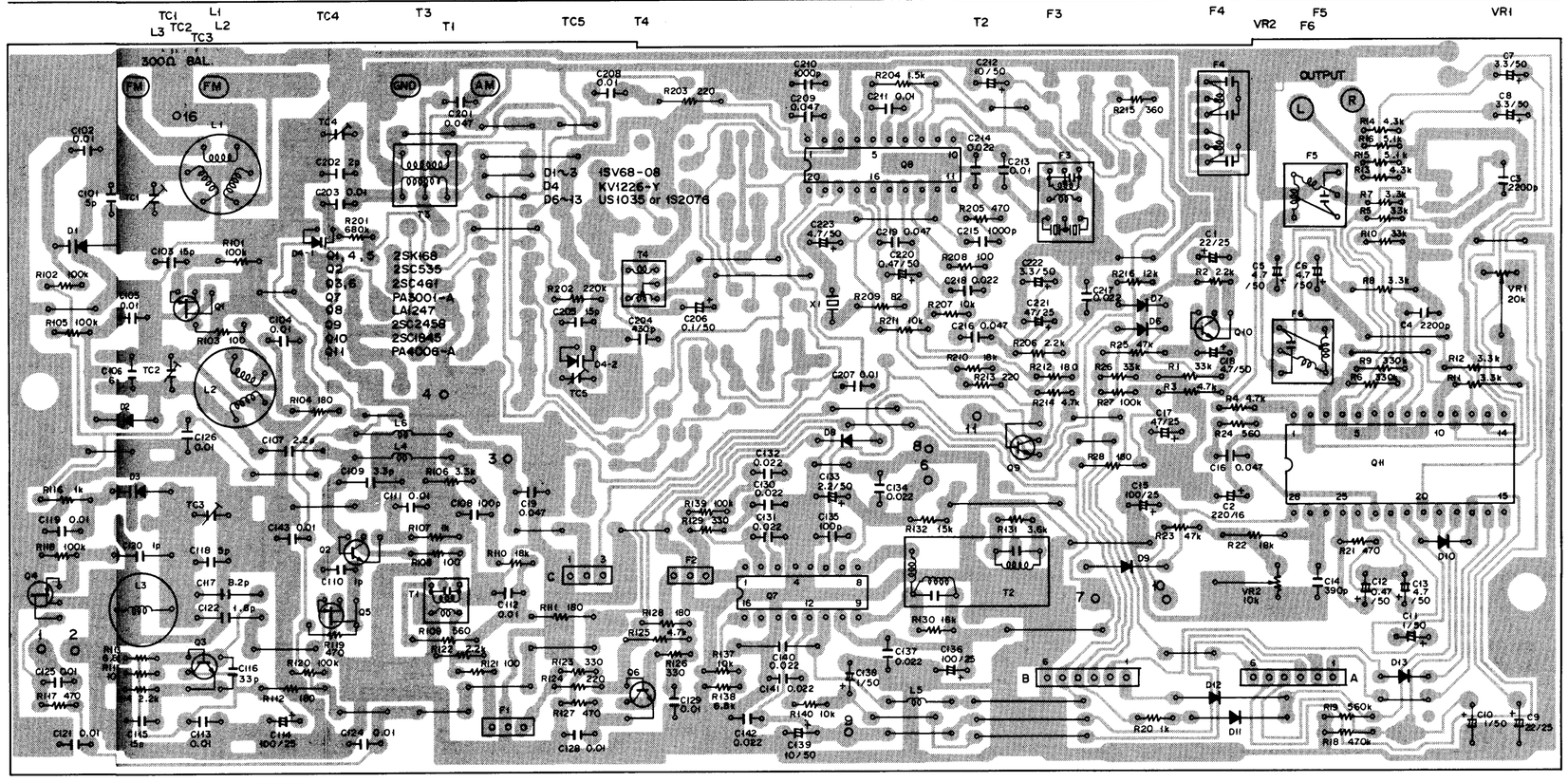

SCHEMATIC DIAGRAM

NOTE:
The indicated semiconductors are representative ones only. Other alternative semiconductors may be used and are listed in the parts list.

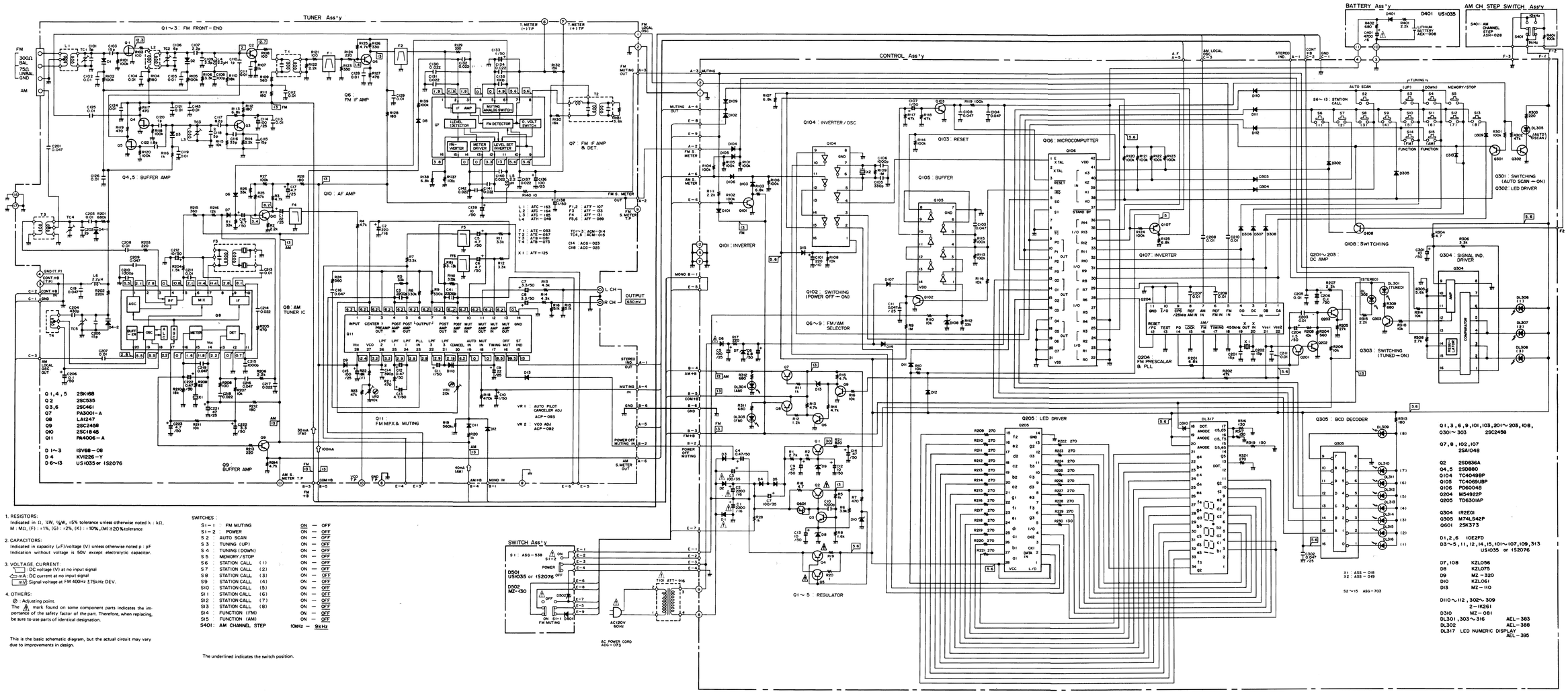

1. RESISTORS:
Indicated in Ω, ¼W, ±5% tolerance unless otherwise noted k : kΩ, M : MΩ, (F) : ±1%, (G) : ±2%, (K) : ±10%, (M) : ±20% tolerance

2. CAPACITORS:
Indicated in capacity (μF)/voltage (V) unless otherwise noted p : pF
Indication without voltage is 50V except electrolytic capacitor.

3. VOLTAGE, CURRENT:
▭ DC voltage (V) at no input signal
⇦ mA: DC current at no input signal
∿V Signal voltage at FM 400Hz ±75kHz DEV.

4. OTHERS:
⊘ : Adjusting point.
The ⚠ mark found on some component parts indicates the importance of the safety factor of the part. Therefore, when replacing, be sure to use parts of identical designation.

This is the basic schematic diagram, but the actual circuit may vary due to improvements in design.

SWITCHES :

S1-1 :	FM MUTING	ON	— OFF
S1-2 :	POWER	ON	— OFF
S2 :	AUTO SCAN	ON	— OFF
S3 :	TUNING (UP)	ON	— OFF
S4 :	TUNING (DOWN)	ON	— OFF
S5 :	MEMORY/STOP	ON	— OFF
S6 :	STATION CALL (1)	ON	— OFF
S7 :	STATION CALL (2)	ON	— OFF
S8 :	STATION CALL (3)	ON	— OFF
S9 :	STATION CALL (4)	ON	— OFF
S10 :	STATION CALL (5)	ON	— OFF
S11 :	STATION CALL (6)	ON	— OFF
S12 :	STATION CALL (7)	ON	— OFF
S13 :	STATION CALL (8)	ON	— OFF
S14 :	FUNCTION (FM)	ON	— OFF
S15 :	FUNCTION (AM)	ON	— OFF
S401 :	AM CHANNEL STEP	10kHz	— 9kHz

The underlined indicates the switch position.