PIONEER®

Service Manual

CIRCUIT DESCRIPTIONS
REPAIR & ADJUSTMENTS

ORDER NO.
ARP-472-0

FM/AM DIGITAL SYNTHESIZED TUNER

TX-950

MODEL TX-950 COMES IN SEVEN VERSIONS DISTINGUISHED AS FOLLOWS:

Type	Voltage	Remarks
KU	AC120V only	U.S.A. model
KC	AC120V only	Canada model
S	AC110V, 120V, 220V, 240V (switchable)	General export model
S/G	AC110V, 120V, 220V, 240V (switchable)	U.S. Military model
SS	AC110V, 120V, 220V, 240V (switchable)	South Africa model
YP	AC240V only	Australia model
HEZ	AC220V, 240V (switchable)	West Germany model

- **This service manual is applicable to the KU type.**
  For servicing of the KC, S, S/G, SS, YP, HEZ, types please refer to the Additional Service Manual.
- **Ce manuel d'instruction se refère au mode de réglage, en français.**
- **Este manual de servicio trata del método de ajuste escrito en español.**

CONTENTS

1. SPECIFICATIONS 2
2. FRONT PANEL FACILITIES 3
3. PARTS LOCATION 4
4. EXPLODED VIEW 5
5. PACKING 7
6. P.C. BOARDS CONNECTION DIAGRAM 8
7. SCHEMATIC DIAGRAM 11
8. ELECTRICAL PARTS LIST 14
9. ADJUSTMENTS 16
   RÉGLAGES 18
   AJUSTE 20
10. SAFETY INFORMATION 22
11. BLOCK DIAGRAM 23
12. CIRCUIT DISCRIPTION 24

PIONEER ELECTRONIC CORPORATION 4-1, Meguro 1-Chome, Meguro-ku, Tokyo 153, Japan
PIONEER ELECTRONICS [USA] INC. P.O. Box 1760, Long Beach, California 90801 U.S.A.
TEL: [800] 421-1404, [213] 420-5914
PIONEER ELECTRONIC [EUROPE] N.V. Keetberglaan 1, 2740 Beveren, Belgium TEL: 03/775·28·08
PIONEER ELECTRONICS AUSTRALIA PTY. LTD. 178-184 Boundary Road, Braeside, Victoria 3195, Australia
TEL: [03] 580-9911

1984 Printed in Japan

www.hifiengine.com

1. SPECIFICATIONS

FM Tuner Section

Frequency range ..... 87.5 MHz to 108 MHz
Usable Sensitivity ..... 10.8 dBf, IHF (0.95 μV/ 75 Ω)
50 dB Quieting Sensitivity .....
Mono; 17.2 dBf, IHF (2 μV/75 Ω)
Stereo; 38.2 dBf, IHF (22.3 μV/75 Ω)
Sensitivity (DIN) ..... Mono; 0.8 μV/75 Ω
Stereo; 28 μV/75 Ω
Signal-to-Noise Ratio ..... Mono; 80 dB
Stereo; 76 dB
Signal-to-Noise Ratio (DIN) ..... Mono; 72 dB
Stereo; 65 dB
Distortion (at 80 dBf) ..... Stereo; 0.4% (1kHz)
Alternate Channel Selectivity ..... 67 dB (400 kHz)
Stereo Separation ..... 40 dB (1 kHz)
Frequency Response ..... 30 Hz to 15 kHz ±1 dB
IF Response Ratio ..... 118 dB
Antenna Input ..... 300 Ω balanced
75 Ω unbalanced

AM Tuner Section

Frequency range
When 10 kHz step ..... 530 kHz to 1,600 kHz
When 9 kHz step ..... 531 kHz to 1,602 kHz
Sensitivity (IHF, Loop antenna) ..... 200 μV/m
Signal-to-Noise Ratio ..... 52 dB
Antenna ..... Loop Antenna

Audio Section

Output Level
FM (100% MOD) FIXED ..... 650 mV
AM (30% MOD) FIXED ..... 150 mV

Miscellaneous

Power Requirements
HE and HEZ models ..... a.c. 220 Volts ~, 50/60 Hz
HB model ..... a.c. 240 Volts ~, 50/60 Hz
YP model ..... a.c. 240 Volts ~, 50 Hz
KU and KC models ..... AC 120 V, 60 Hz
S, SS and S/G models .....
AC 110/120/220/240 V (switchable) 50/60 Hz
Power Consumption
HE and HEZ models ..... 8.5 W
HB model ..... 8.5 W
YP model ..... 8.5 W
KU and KC models ..... 8.5 W
S, SS and S/G models ..... 8.5 W
Dimensions ..... 420(W) x 60(H) x 217(D) mm
16-9/16(W) x 2-3/8(H) x 8-9/16(D) in
Weight (without package) ..... 2.5 kg(5 lb 8 oz)

Furnished Parts

FM T-type Antenna 1
AM Loop Antenna 1
Connection Cord with Pin Plugs 1
Operating Instructions 1

NOTE:
Specifications and design subject to possible modification without notice due to improvements.

www.hifiengine.com

2. FRONT PANEL FACILITIES

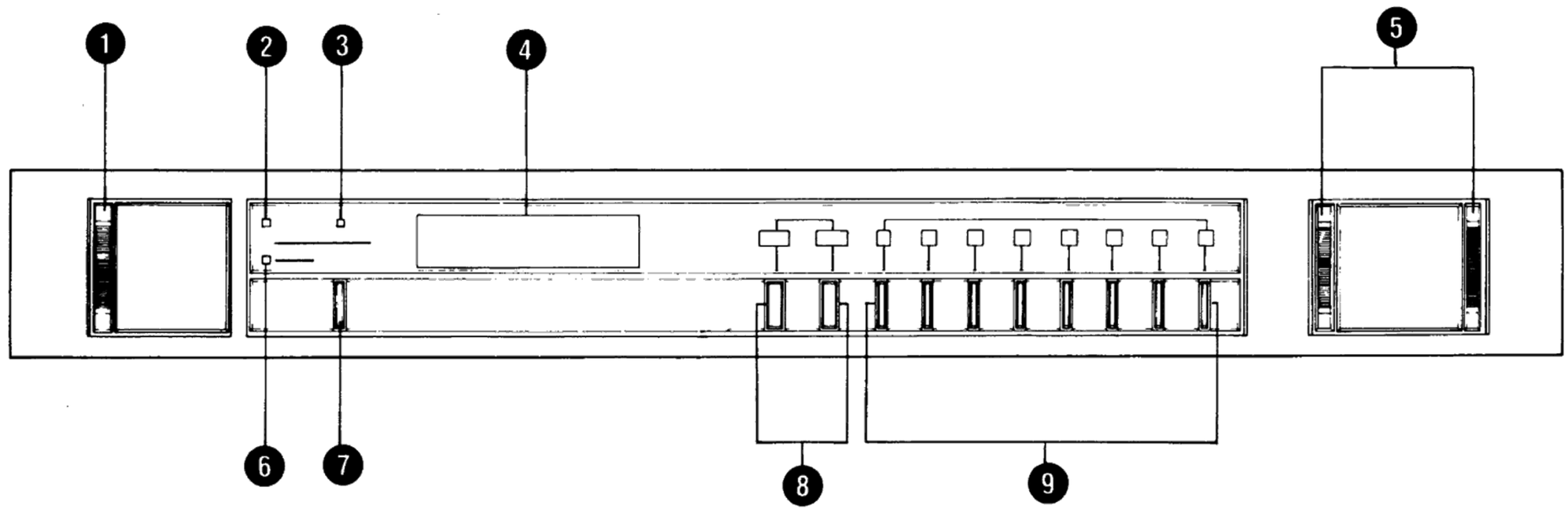

❶ POWER SWITCH (POWER)

When this switch is set to the ON position, power is supplied to the tuner's main circuits. The unit's POWER switch is geared to selecting the transformer's secondary and so even at the STAND-BY position, the unit's circuitry will work as long as the power cord is connected to power outlet. Disconnect the power cord from the power outlet when you do not plan to use the unit for a long period of time.

❷ FM STEREO INDICATOR

This lights when a stereo program has been picked up during an FM broadcast.

❸ TUNED INDICATOR

This lights up to indicate when finest tuning of a station has been achieved.

❹ FREQUENCY DISPLAY

This shows the frequency of the station currently being received in digital form.The FM band is indicated by MHz, and the AM band by kHz

❺ TUNING SWITCH

This is used to locate stations. Push the left half of this switch "DOWN" to locate a station broadcasting on a lower frequency and the right half of this switch "UP" to locate a station broadcasting on a higher frequency.

❻ MEMORY INDICATOR

This lights when the MEMORY switch is depressed.

❼ MEMORY SWITCH

This is used to memorize stations. When the switch is depressed, the MEMORY indicator will light. To memorize the frequency of any station, press the STATION CALL switch while the MEMORY indicator is lighting up.

❽ FUNCTION SWITCHES

These are used to select either the FM or AM broadcasting bands.
FM: Push to receive FM band broadcasts.
AM: Push to receive AM band broadcasts.

❾ STATION CALL SWITCHES

These are used to preset and recall broadcasting stations thereby eliminating the necessity of using the TUNING switch to locate your favorite stations.

www.hifiengine.com

3. PARTS LOCATION

NOTES:

- *The ⚠ mark found on some component parts indicates the importance of the safety factor of the part. Therefore, when replacing, be sure to use parts of identical designation.*
- *For your Parts Stock Control, the fast moving items are indicated with the marks ★★ and ★.*
  ★★ GENERALLY MOVES FASTER THAN ★
  This classification shall be adjusted by each distributor because it depends on model number, temperature, humidity, etc.

Front Panel View

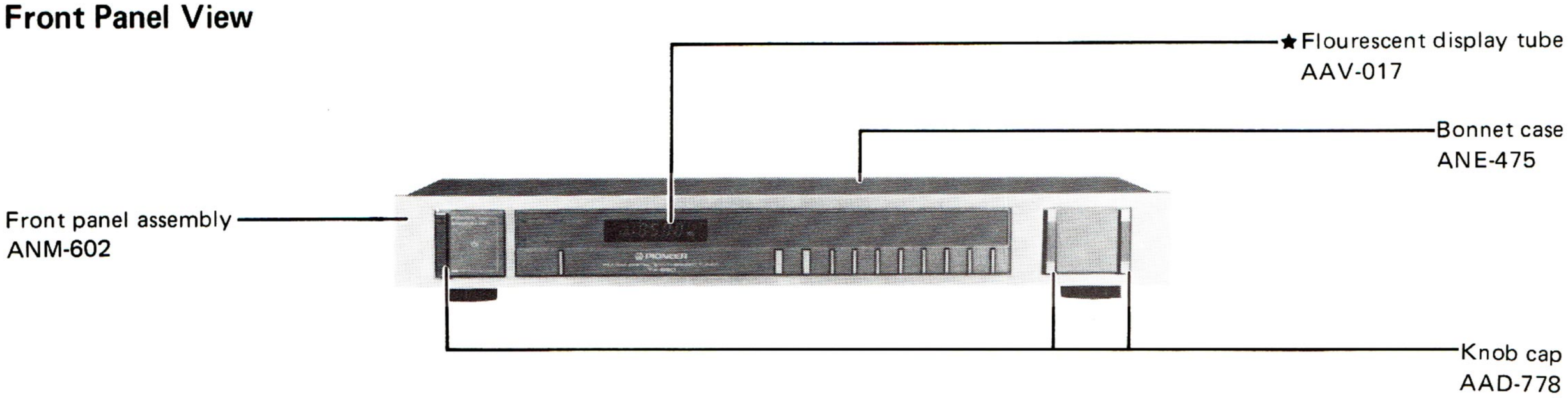

Rear Panel View

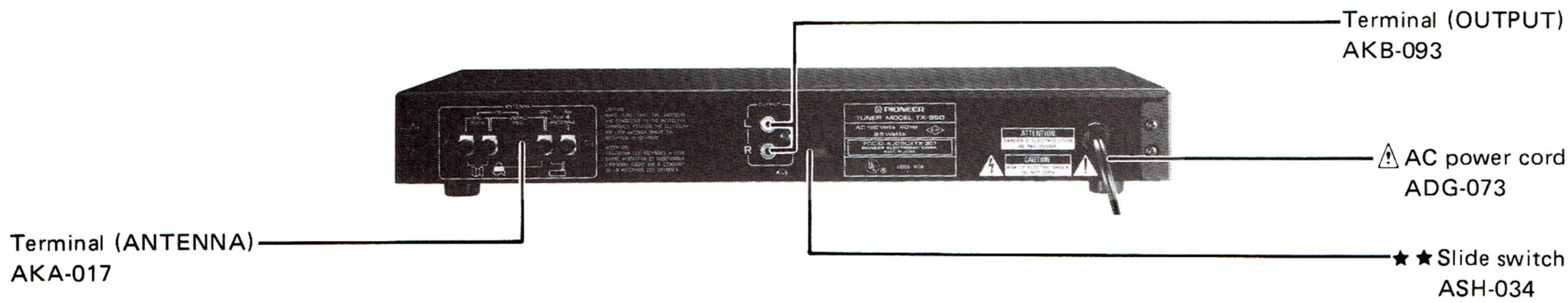

Top View

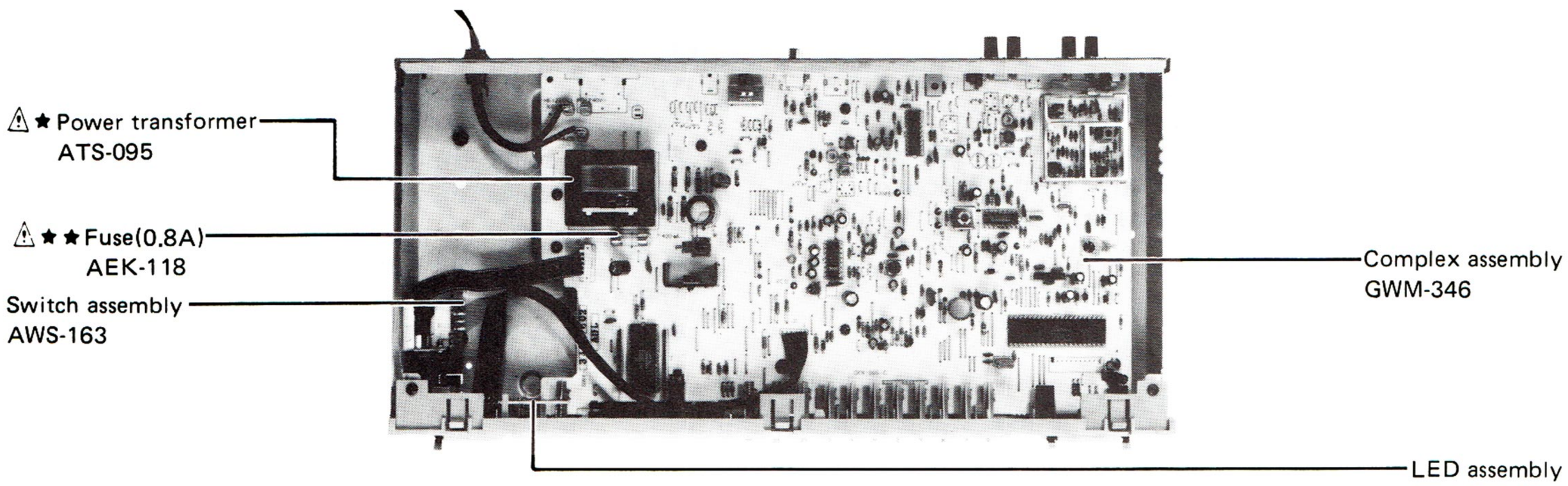

www.hifiengine.com

4. EXPLODED VIEW

NOTES:

- *Parts without part number cannot be supplied.*
- *The ⚠ mark found on some component parts indicates the importance of the safety factor of the part. Therefore, when replacing, be sure to use parts of identical designation.*
- *For your Parts Stock Control, the fast moving items are indicated with the marks ★★ and ★*
  ★★ GENERALLY MOVES FASTER THAN ★
  This classification shall be adjusted by each distributor because it depends on model number, temperature, humidity, etc.

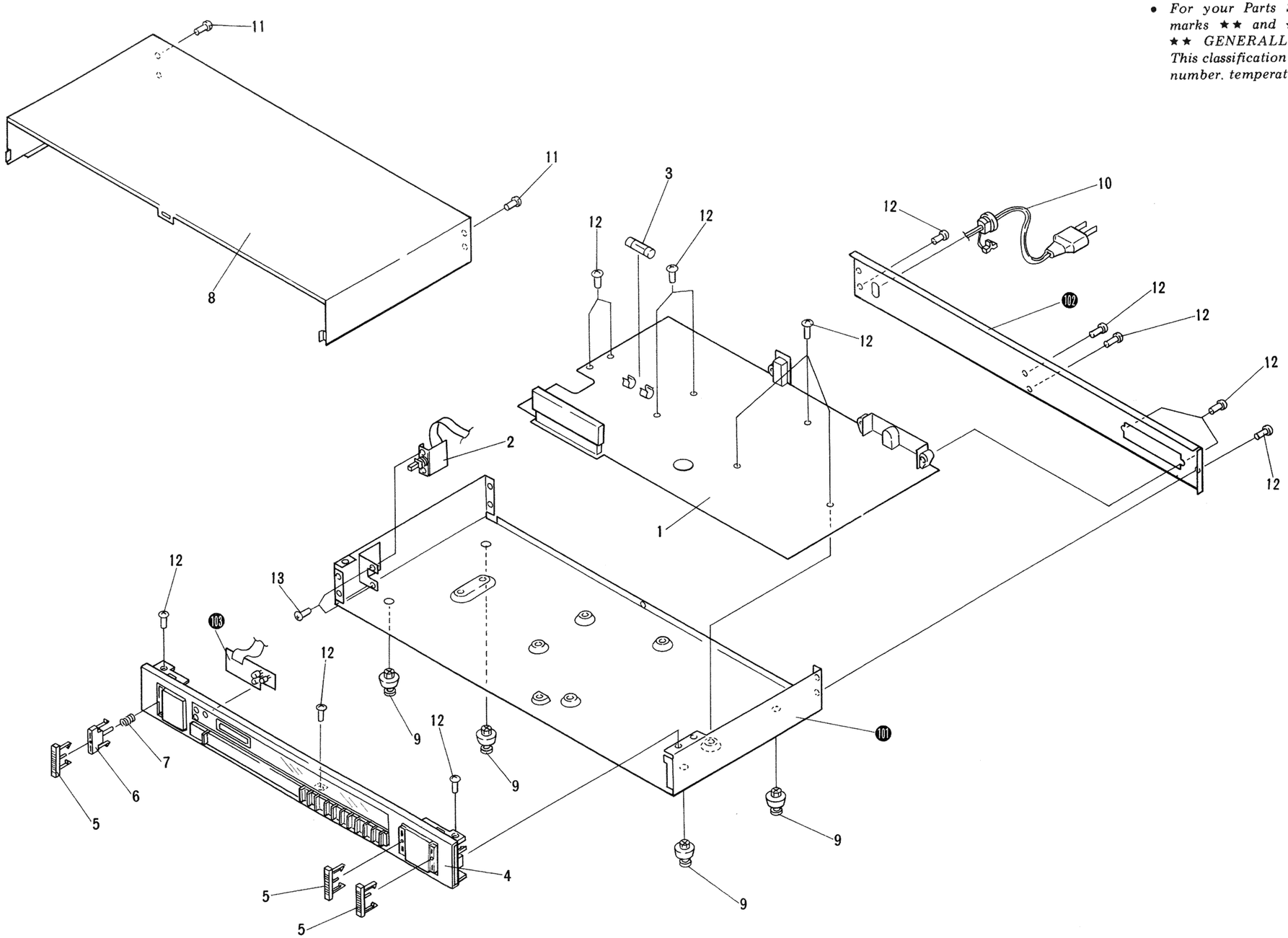

Parts List of Exploded View

Mark	No.	Part No.	Description
	1.	GWM-346	Complex assembly
	2.	AWS-163	Switch assembly
⚠ ★★	3.	AEK-118	Fuse (0.8A/125V)
	4.	ANM-602	Front panel assembly
	5.	ADD-778	Knob cap
	6.	AAC-059	Knob (POWER)
	7.	ABH-134	Coiled spring
	8.	ANE-475	Bonnet case
	9.	AEC-903	Leg assembly
⚠	10.	ADG-073	AC power cord
	11.	BBT30P080FZK	Screw (3 x 8)
	12.	BBZ30P080FZK	Screw (3 x 8)
	13.	VMZ30P060FMC	Screw (3 x 6)
	101.		Chassis
	102.		Rear panel
	103.		LED assembly

www.hifiengine.com

5. PACKING

Parts List of Packing

Mark	No.	Part No.	Description
	1.	ATB-086	Loop antenna assembly
	2.	ADE-074	Connection cord
	3.	ADH-005	FM antenna
	4.	ARB-602	Operating instructions
	5.	AHA-376	Side pad
	6.	AHE-332	Packing case

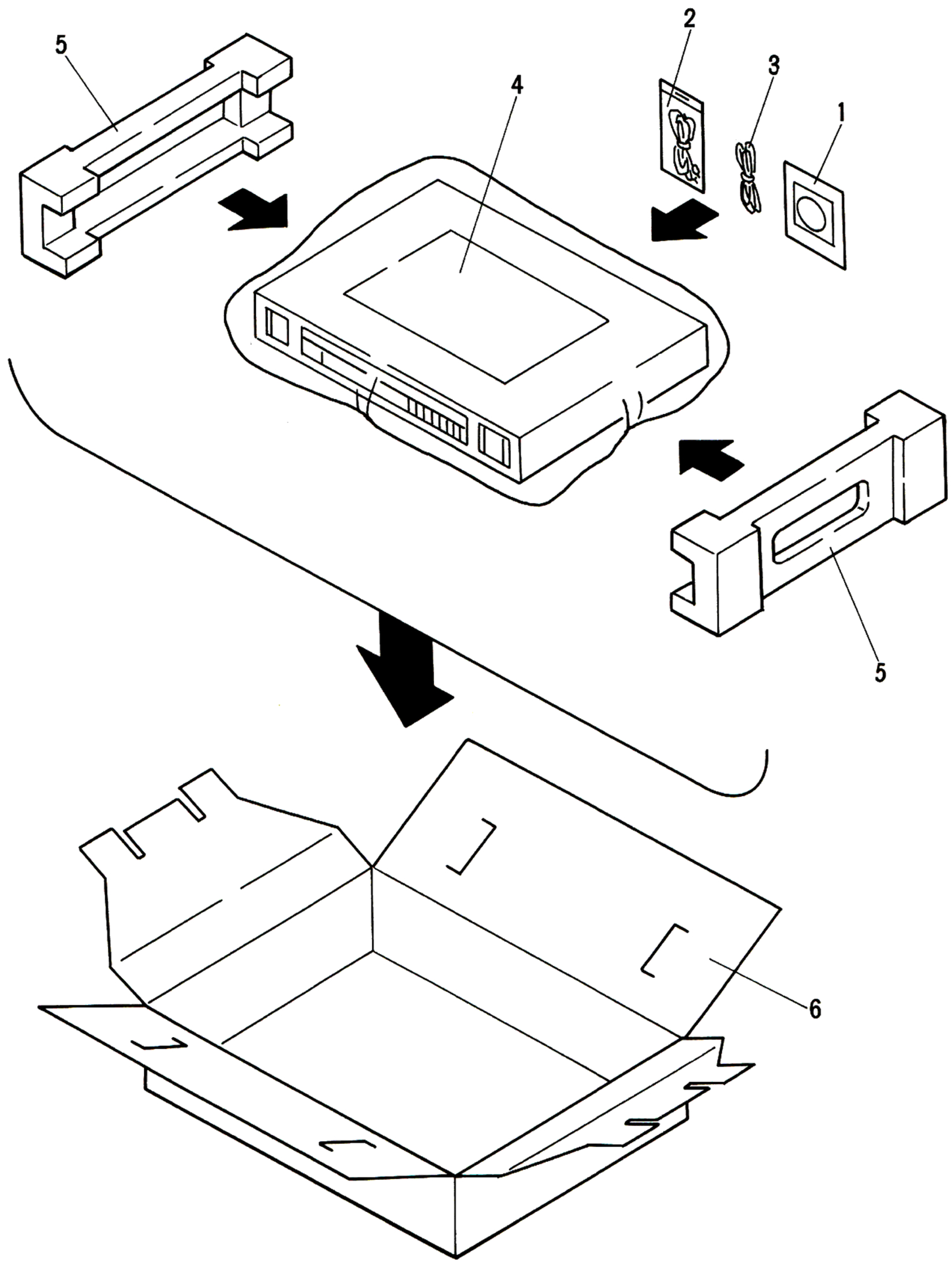

www.hifiengine.com

6. P.C. BOARDS CONNECTION DIAGRAM

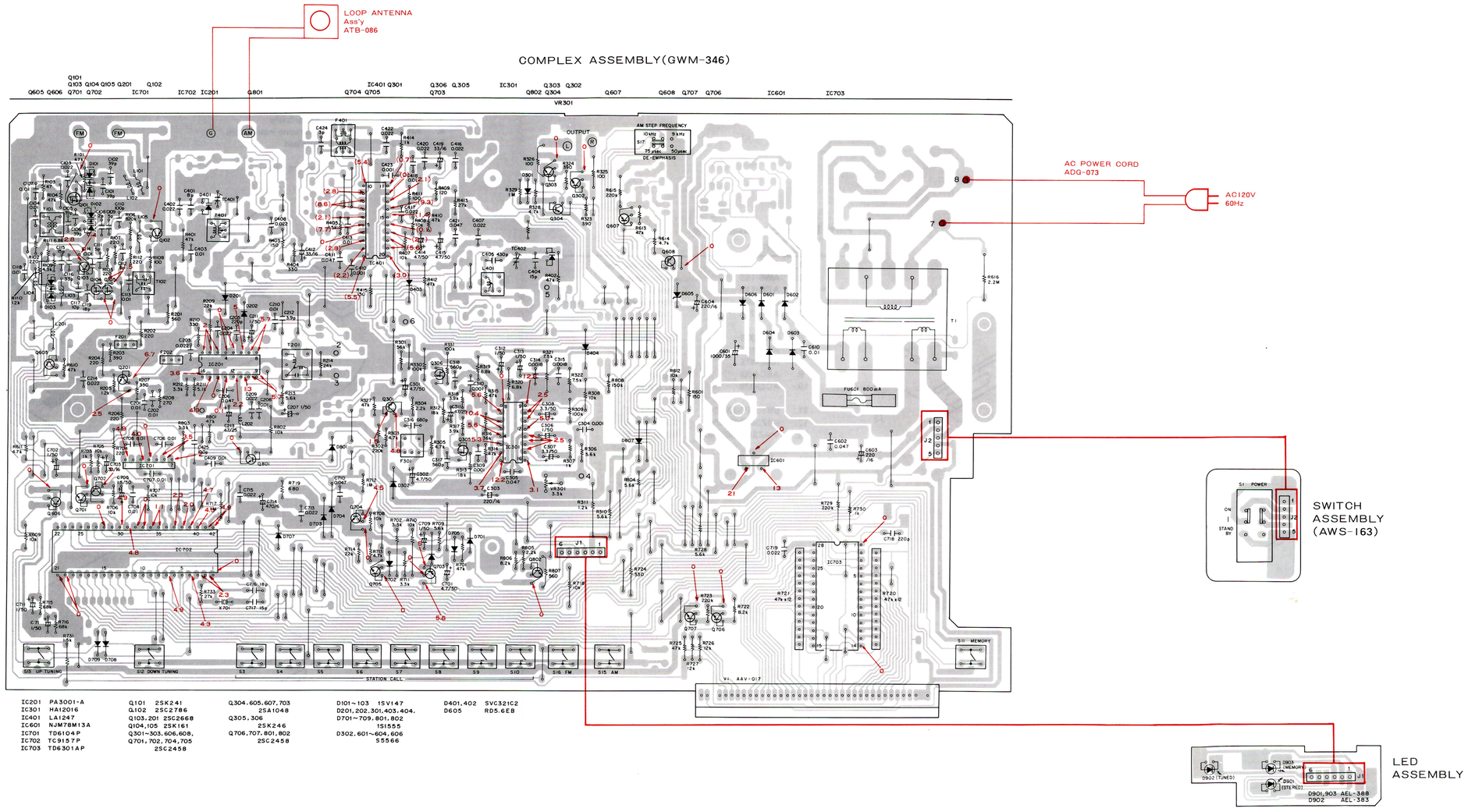

External Appearance of Transistors and ICs

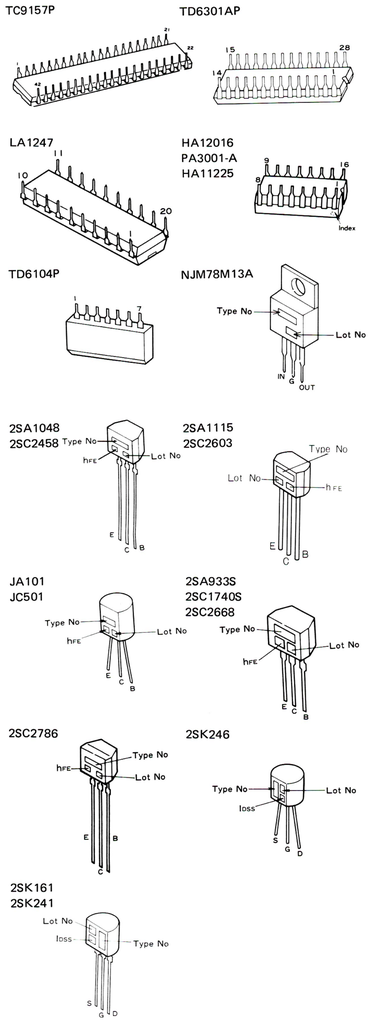

7. SCHEMATIC DIAGRAM

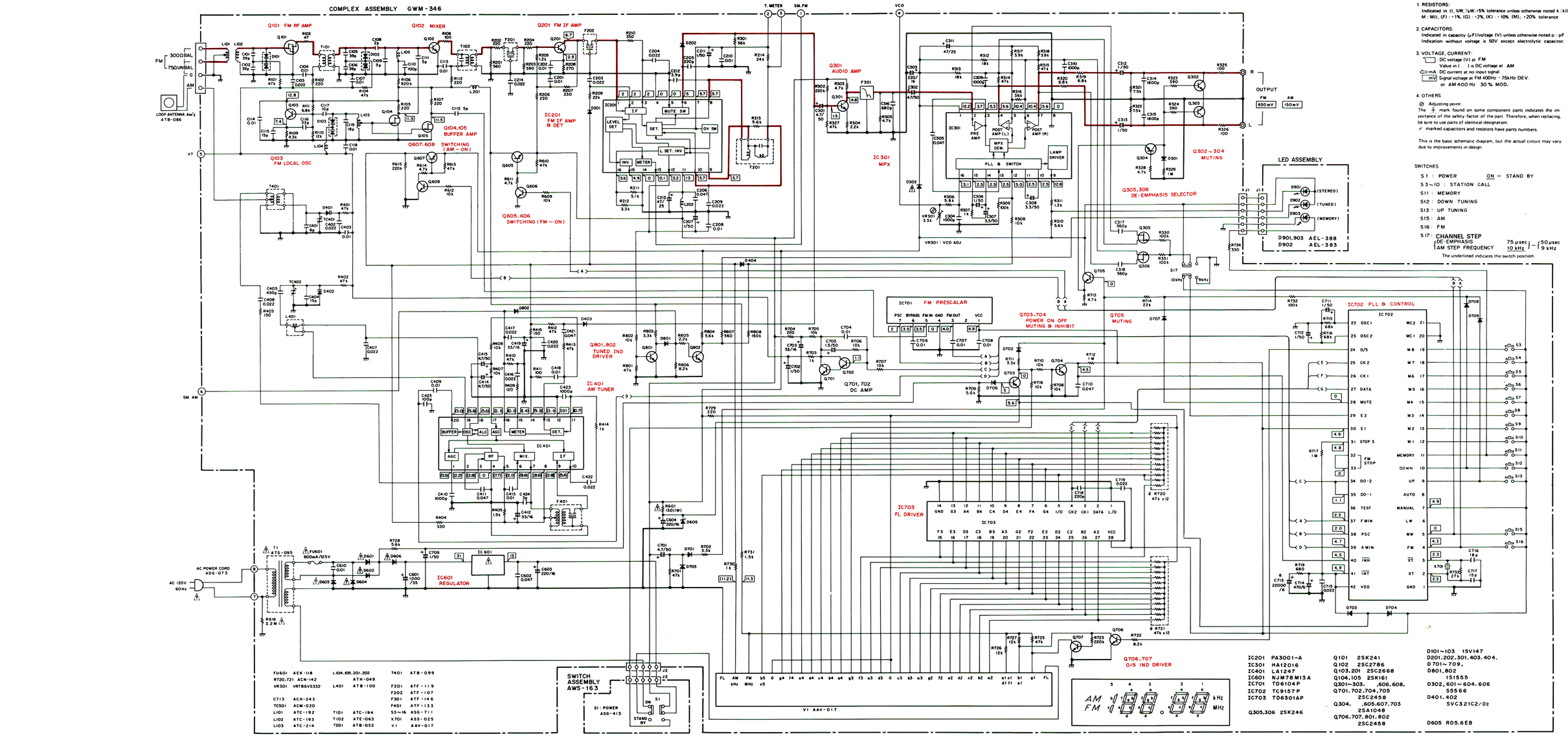

1. RESISTORS:
Indicated in Ω, ¼W, ½W, ±5% tolerance unless otherwise noted k : kΩ, M : MΩ, (F) : ±1%, (G) : ±2%, (K) : ±10% (M); ±20% tolerance

2. CAPACITORS:
Indicated in capacity (μF)/voltage (V) unless otherwise noted p : pF
Indication without voltage is 50V except electrolytic capacitor.

3. VOLTAGE, CURRENT:
DC voltage (V) at FM
Value in ( ) is DC voltage at AM
mA DC current at no input signal
mV Signal voltage at FM 400Hz · 75kHz DEV. or AM 400 Hz 30 % MOD.

4. OTHERS
Adjusting point
The ⚠ mark found on some component parts indicates the importance of the safety factor of the part. Therefore, when replacing, be sure to use parts of identical designation.
≠ marked capacitors and resistors have parts numbers.

This is the basic schematic diagram, but the actual circuit may vary due to improvements in design.

SWITCHES

S1 : POWER — ON — STAND BY
S3~10 : STATION CALL
S11 : MEMORY
S12 : DOWN TUNING
S13 : UP TUNING
S15 : AM
S16 : FM
S17 : CHANNEL STEP
DE-EMPHASIS 75 μsec — 50 μsec
AM STEP FREQUENCY 10 kHz — 9 kHz

The underlined indicates the switch position.

8. ELECTRICAL PARTS LIST

NOTES:

- *When ordering resistors, first convert resistance values into code form as shown in the following examples.*

  Ex. 1 When there are 2 effective digits (any digit apart from 0), such as 560 ohm and 47k ohm (tolerance is shown by J=5%, and K=10%).

560Ω	56×10^1	561	RD¼PS 561 J
47kΩ	47×10^3	473	RD¼PS 473 J
0.5Ω	0R5		RN2H 0R5 K
1Ω	010		RS1P 010 K

  Ex. 2 When there are 3 effective digits (such as in high precision metal film resistors).

5.62kΩ	562×10^1	5621	RN¼SR 5621 F

- *The ⚠ mark found on some component parts indicates the importance of the safety factor of the part. Therefore, when replacing, be sure to use parts of identical designation.*
- *For your Parts Stock Control, the fast moving items are indicated with the marks ★★ and ★ .*

  ★★ GENERALLY MOVES FASTER THAN ★

  This classification shall be adjusted by each distributor because it depends on model number, temperature, humidity, etc.

Miscellaneous Parts

Mark	Symbol & Description	Part No.
	Complex assembly	GWM-346
	Switch assembly	AWS-163
⚠	Fuse (0.8A/125V)	AEK-118
⚠	AC power cord	ADG-073

Complex Assembly (GWM-346)

SEMICONDUCTORS

Mark	Symbol & Description	Part No.
★★	IC201	PA3001-A (HA11225)
★★	IC301	HA12016
★★	IC401	LA1247
⚠ ★★	IC601	NJM78M13A
★★	IC701	TD6104P
★★	IC702	TC9157P
★★	IC703	TD6301AP
★★	Q101	2SK241-Y
★★	Q102	2SC2786-L
★★	Q103, Q201	2SC2668
★★	Q104, Q105	2SK161-Y
★★	Q301 – Q303, Q606, Q608, Q701, Q702, Q704 – Q707, Q801, Q802	2SC2458 (2SC1740S) (2SC2603) (JC501)
★★	Q304, Q605, Q607, Q703	2SA1048 (2SA1115) (JA101) (2SA933S)
★★	Q305, Q306	2SK246
★	D101 – D103	1SV147
★	D201, D202, D301, D403, D404, D701 – D709, D801, D802	1S1555 (US1035)
⚠ ★	D302, D601 – 604, D606	S5566
★	D401, D402	SVC321C2/D2 (SVC321SP-AS)
★	D605	RD5.6EB

TRANSFORMERS, COILS AND FILTERS

Mark	Symbol & Description	Part No.
	T401 AM ANT transformer	ATB-099
	T101 FM RF transformer	ATC-194
	T201 FM DET transformer	ATE-052
	T102 FM IF transformer	ATE-063
⚠ ★	T1 Power transformer	ATS-095
	L401 AM OSC coil	ATB-100
	L101 FM ANT coil	ATC-192
	L102 FM ANT coil	ATC-193
	L103 FM OSC coil	ATC-214
	L104, L105, L201, L202 RF choke coil	ATH-049
	F202 FM ceramic filter	ATF-107
	F201 FM ceramic filter	ATF-119
	F301 Beat eliminate filter	ATF-146
	F401 AM ceramic filter	ATF-133

SWITCHES

Mark	Symbol & Description	Part No.
★★	S3 – S13, S15, S16 Tact switch	ASG-711 (ASG-703)
★★	S17 Slide switch	ASH-034

www.hifiengine.com

LW Tuner Section (Only TX-950L)

- Connect the furnished AM loop antenna between terminals AM ANTENNA and GND.
- Connect the AM signal generator (AM SG) to the AM ANTENNA terminal through a 10kΩ resistor.
- Set the TX-950L to the LW band.

(*3) Tune the AM SG to the TX-950L.

Step	AM SG (400Hz, 30% modulation)		TX-950L Frequency display	Adjustment point	Adjustment procedure
	Frequency	Level			
1	No signal		281kHz	L503	DC 5.2V ±0.1V between terminal no. 5 and ground.
2	164kHz(*3)	86dB	164kHz	T501	Adjust until DC voltage between terminal no. 6 and ground is maximum.
3	254kHz(*3)	86dB	254kHz	TC501	
4	Repeat steps 2 and 3 until maximum sensitivity is attained.				

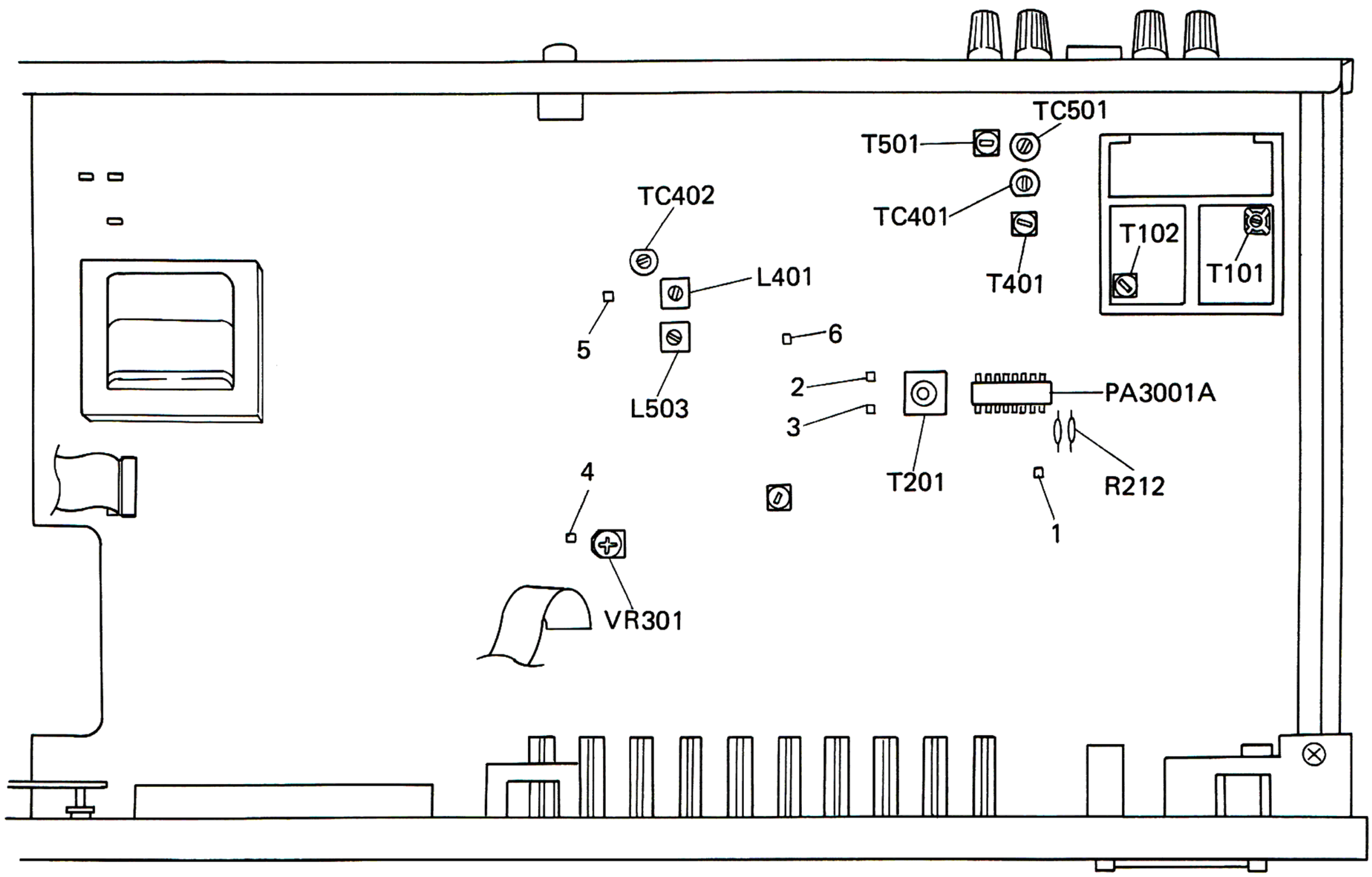

www.hifiengine.com

9. RÉGLAGES

Section accordeur MF (TX-950/TX-950L)

- Brancher le générateur de signal MF (FM SG) sur la borne de 300 Ohms de l'antenne MF au moyen d'une antenne fictive de 300 Ohms.
- Régler le TX-950(L) sur la bande MF.

(*1) Accorder le FM SG sur le TX-950(L).

(*2) Brancher le générateur de signal stéréo multiplex MF sur la borne de modulation externe du FM SG. Régler la modulation du conducteur principal à une déviation de 1kHz/L+R/±67,5kHz, le pilote à une déviation de 19kHz/±7,5kHz.

Phase	FM SG (déviation de 400Hz, ±75kHz)		TX-950 (L) Affichage de fréquence	Point de réglage	Méthode de réglage
	Fréquence	Niveau			
1	98,0MHz(*1)	20dB	98,0MHz	T101, T102	Régler jusqu'à ce que la tension CC entre la borne n° 1 et la masse soit au maximum.
2	98,0MHz (*1)	66dB	98,0MHz	T201	Régler jusqu'à ce que la tension CC entre les borne n° 2 et n° 3 au 0V (±30mV).
3	98,0MHz(*1) pas de modulation	86dB	98,0MHz	VR301	Régler le signal à 76kHz (±150Hz) entre la borne n° 4 et la masse.
4	98,0MHz(*1) (Modulation stéréo (*2) (Principal=1kHz gauche ou droite)	86dB	98,0MHz	T102 (Entre ±90°)	Régler jusqu'à ce que la distorsion aux bornes de sortie gauche et droite soit au minimum.
5	98,0HMz(*1) Modulation stereo(*2)	38dB	98,0MHz	R212	Si les indicateurs STEREO et de calage de station (TUNED) ne sont pas allumés, retirer la résistance R212.

Section accordeur MA
Section tuner ondes moyennes (MW) (TX-950/TX-950L)

- Brancher l'antenne bouclée MA fournie entre les bornes d'antenne MA et la masse.
- Brancher le générateur de signal MA (AM SG) sur la borne d'antenne MA à travers uns résistance de 10 kOhms.
- Régler le TX-950(L) sur la bande MA (Ondes moyennes).
- Positionner le commutateur de canaux AM sur la position de 9kHz (TYPE KU, S et S/G).

(*3) Accorder le AM SG sur le TX-950(L).

Phase	AM SG (Modulation 400Hz, 30%)		TX-950 (L) Affichage de fréquence	Point de réglage	Méthode de réglage
	Fréquence	Niveau			
1	Pas de signal		531kHz	L401	1,3V CC entre la borne n° 5 et la masse.
2	Pas de signal		1602kHz	TC402	10V CC entre la borne n° 5 et la masse.
3	Répéter les phase 1 et 2 jusqu'à ce que les spécifications soient correctes.				
4	603kHz(*3)	76dB	603kHz	T401	Régler jusqu'à ce que la tension CC entre la borne n° 6 et la masse soit au maximum.
5	1395kHz(*3)	76dB	1395kHz	TC401	
6	Répéter les phase 4 et 5 jusqu'à ce que soit atteint le maximum de sensibilité.				

www.hifiengine.com

Sección del sintonizador de LW (Solo TX-950L)

- Conectar la antena de cuadro de AM suministrada entre los terminales AM ANTENNA y GND.
- Conectar el generador de señales de AM (AM SG) al terminal AM ANTENNA a través de un resistor de 10kΩ.
- Ajustar el TX-950L a la banda de LW.

(*3) Sintonizador el AM SG con el TX-950L.

Phase	AM SG (Modulation 400Hz, 30%)		TX-950 (L) Affichage de fréquence	Point de réglage	Méthode de réglage
	Fréquence	Niveau			
1	Pas de signal		281kHz	L503	CC 5,2V±0,1V entre la borne n° 5 et la masse.
2	164kHz(*3)	86dB	164kHz	T501	Régler jusqu'à ce que la tension CC entre la borne n° 6 et la masse soit au maximum.
3	254kHz(*3)	86dB	254kHz	TC501	
4	Répéter les phase 2 et 3 jusqu'à ce que soil atteint le maximum de sensibilité.				

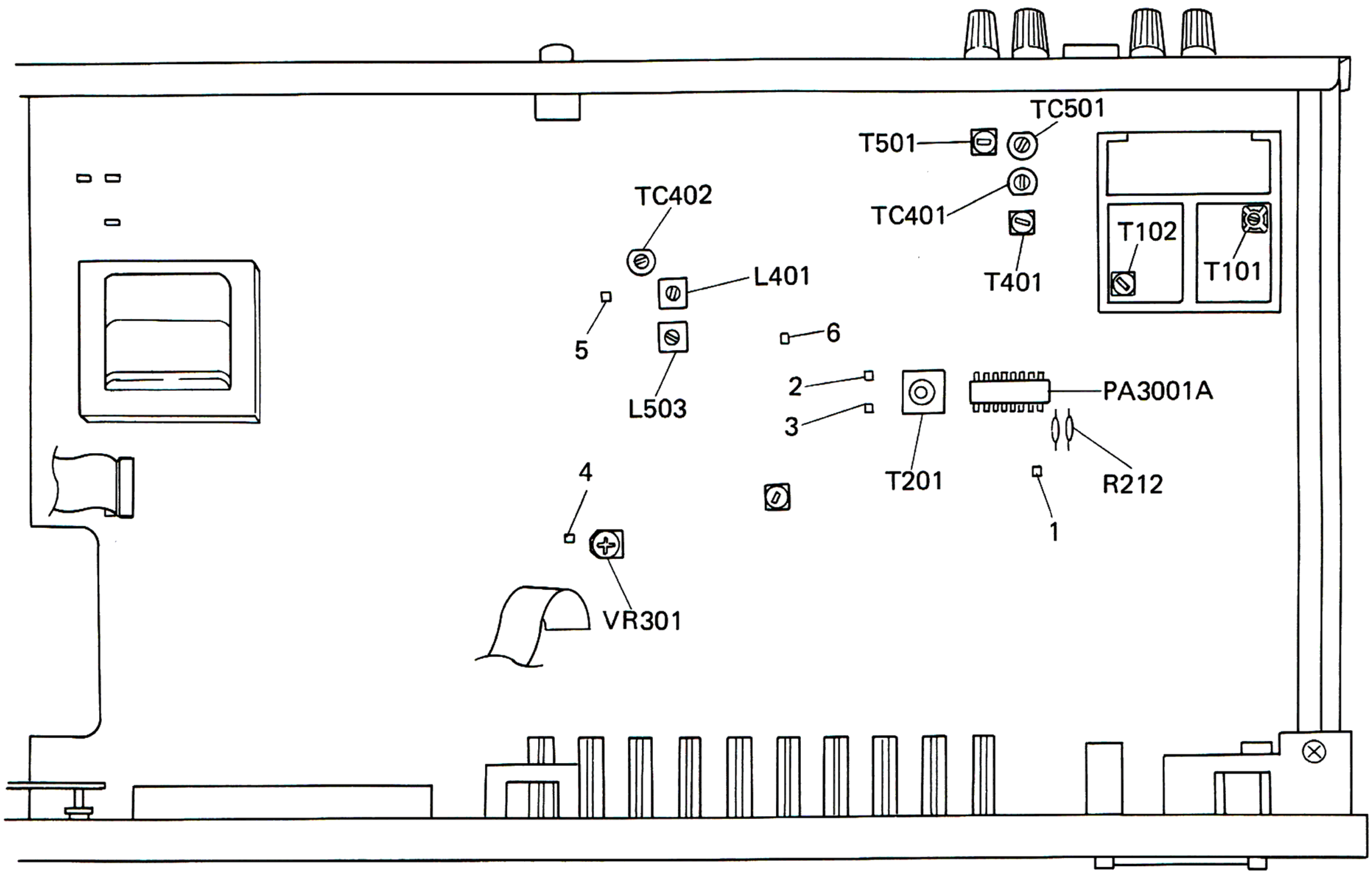

www.hifiengine.com

9. AJUSTE

Sección del sintonizador de FM (TX-950/TX-950L)

- Conectar el generador de señales de FM (FM SG) al terminal FM ANTENNA 300Ω a través de una antena ficticia de 300Ω.
- Ajustar el TX-950(L) a la banda de FM.

(*1) Sintonizar el FM SG con el TX-950(L).

(*2) Conectar el genedador de senãles estereofónicas de multiplex de FM al terminal de modulación exterior del FM SG.
Ajustar la modulación a Principal 1kHz/L+R/±67,5kHz de desviación y Piloto 19kHz/±7,5kHz de desviación.

Paso	FM SG (400Hz, desviación de ±75kHz)		Frecuencímetro del TX-950(L)	Puntos de ajuste	Procedimientos de ajuste
	Frequencia	Nivel			
1	98,0MHz(*1)	20dB	98,0MHz	T101, T102	Ajustar hasta que la tensión de CC entre el terminal n° 1 y masa sea la máxima.
2	98,0MHz(*1)	66dB	98,0MHz	T201	Ajustar hasta que la tensión de CC entre los terminales n° 2 y n° 3 a 0V (dentro de ±30mV).
3	98,0MHz(*1)	86dB	98,0MHz	VR301	Ajustar la señal entre el terminal n° 4 y masa a 76kHz (±150Hz).
	Sin modulación				
4	98,0MHz(*1)	86dB	98,0MHz	T102 (Dentro de b90°)	Ajustar hasta que la distorsion en el terminal OUTPUT R o L sea la mínima.
	Modulación estereofónica(*2) (Principalñ1kHz, izq, o der.)				
5	98,0MHz(*1)	38dB	98,0MHz	R212	Si el indicador STEREO y el indicador TUNED no están en ON translade el R212.
	Modulacion estero fonica(*2)				

Sección del sintonizador de AM
Sección del sintonizador de MW (TX-950/TX-950L)

- Conectar la antena de cuadro de AM suministrada entre los terminales AM ANTENNA y GND.
- Conectar el generador de senãles de AM (AM SG) al terminal AM ANTENNA a través de un resistor de 10kΩ.
- Ajustar el TX-950(L) a la banda de AM (MW).
- Ajustar el selector de paso del canal de AM (AM CHANNEL STEP) en la posición de 9kHz (tipos KU, S y S/G).

(*3) Sintonizador el AM SG con el TX-950(L).

Paso	AM SG (400Hz, 30% de modulación)		Frecuencímetro del TX-950(L)	Puntos de ajuste	Procedimientos de ajuste
	Frequencia	Nivel			
1	Sin señal		531kHz	L401	1,3V CC entre el terminal n° 5 y masa.
2	Sin señal		1602kHz	TC402	10V CC entre el terminal n° 5 y masa.
3	Repetir los pasos 1 y 2 hasta que ambas especificaciones sean correctas.				
4	603kHz(*3)	76dB	603kHz	T401	Ajustar hasta que la tension de CC entre el terminal n° 6 y masa sea la máxima.
5	1395kHz(*3)	76dB	1395kHz	TC401	
6	Repetir los pasos 4 y 5 hasta lograrse la máxima sensibilidad.				

www.hifiengine.com

Partie tuner grandes ondes (LW) (TX-950L uniquement)

- Brancher l'antenne bouclée MA fournie entre les bornes d'antenne MA et la masse.
- Brancher le générateur de signal MA (AM SG) sur la borne d'antenne MA à travers uns résistance de 10 kOhms.
- Régler le TX-950L sur la bande LW.

(*3) Accorder le AM SG sur le TX-950L.

Paso	AM SG (400Hz, 30% de modulación)		Frecuencí-metro del TX-950(L)	Puntos de ajuste	Procedimientos de ajuste
	Frequencia	Nivel			
1	Sin señal		281kHz	L503	5,2V CC ±0,1V entre el terminal n⁰ 5 y masa.
2	164kHz(*3)	86dB	164kHz	T501	Ajustar hasta que la tensión de CC entre el terminal n⁰ 6 y masa sea la máxima.
3	254kHz(*3)	86dB	254kHz	TC501	
4	Repetir los pasos 2 y 3 hasta lograrse la máxima sensibilidad.				

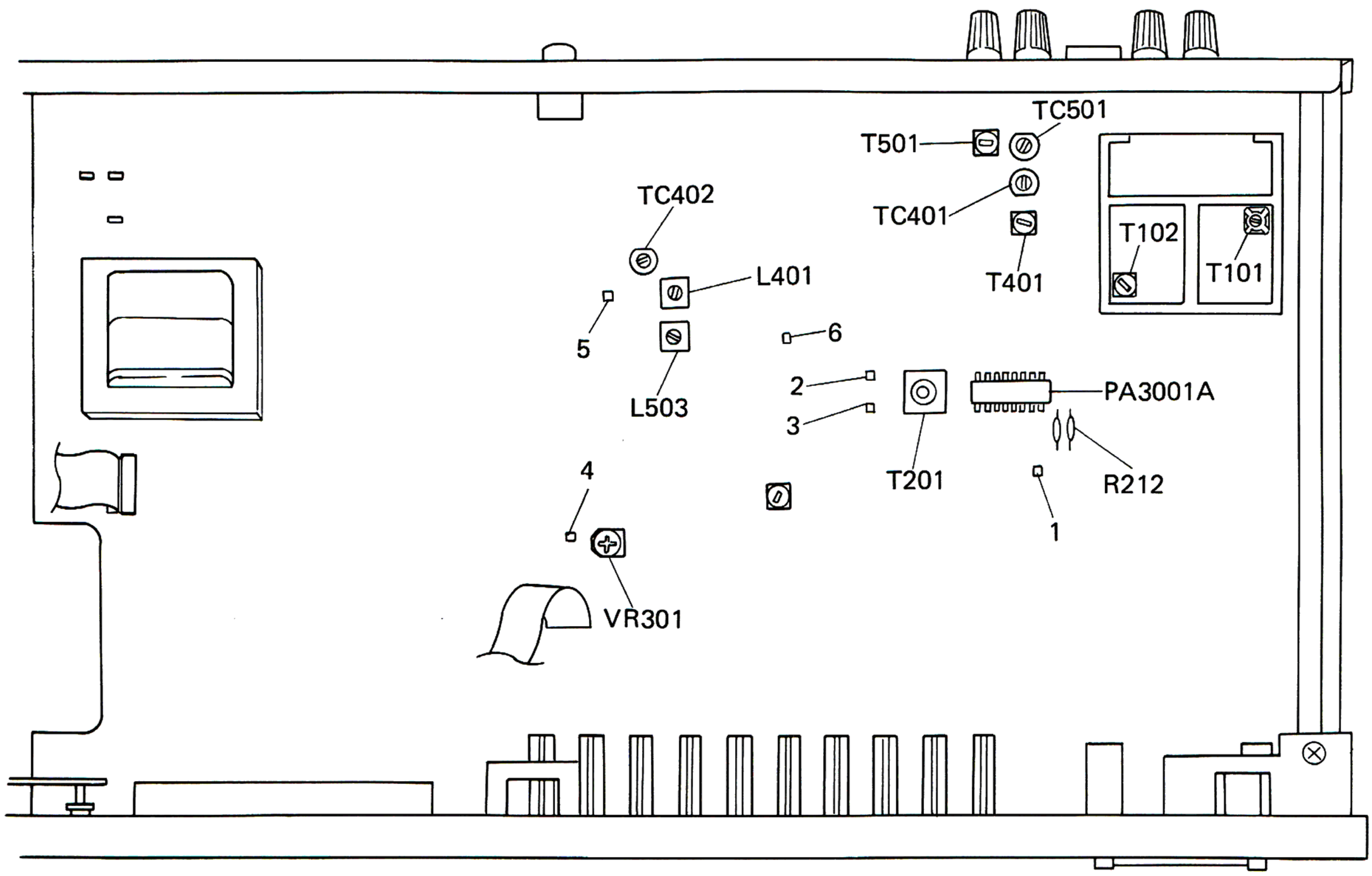

www.hifiengine.com

10. SAFETY INFORMATION

1. SAFETY PRECAUTIONS

The following check should be performed for the continued protection of the customer and service technician.

LEAKAGE CURRENT CHECK

Measure leakage current to a known earth ground (water pipe, conduit, etc.) by connecting a leakage current tester such as Simpson Model 229-2 or equivalent between the earth ground and all exposed metal parts of the appliance (input/output terminals, screwheads, metal overlays, control shaft, etc.). Plug the AC line cord of the appliance directly into a 120V AC 60Hz outlet and turn the AC power switch on. Any current measured must not exceed 0.5mA.

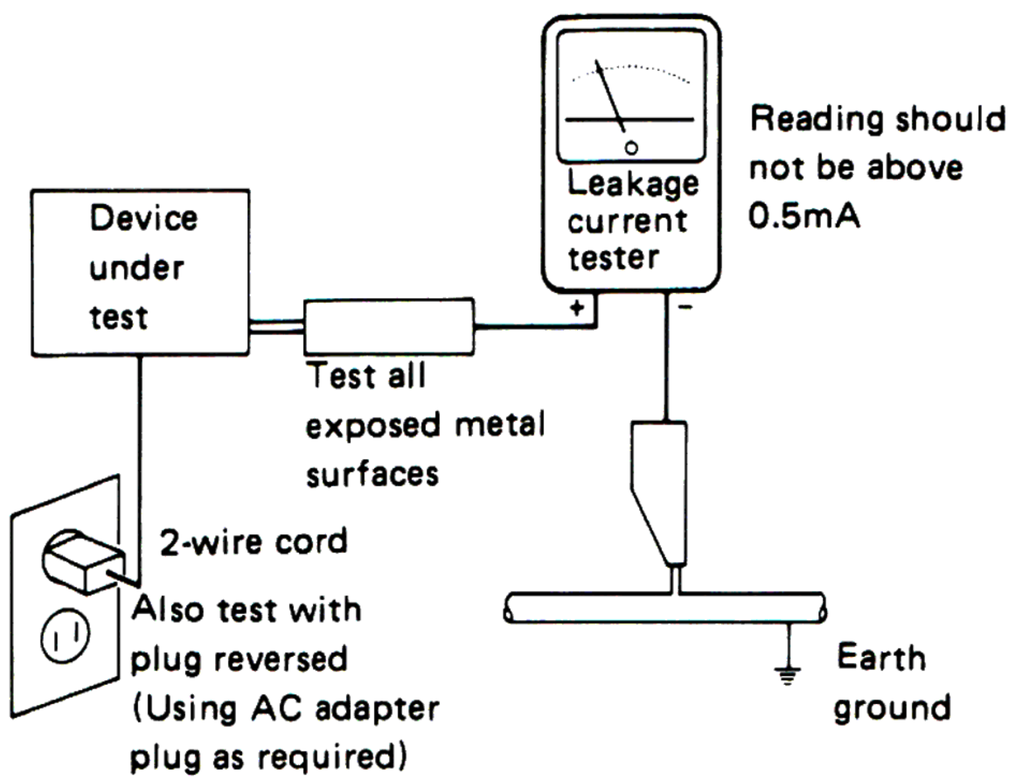

AC Leakage Test

ANY MEASUREMENTS NOT WITHIN THE LIMITS OUTLINED ABOVE ARE INDICATIVE OF A POTENTIAL SHOCK HAZARD AND MUST BE CORRECTED BEFORE RETURNING THE APPLIANCE TO THE CUSTOMER.

2. PRODUCT SAFETY NOTICE

Many electrical and mechanical parts in the appliance have special safety related characteristics. These are often not evident from visual inspection nor the protection afforded by them necessarily can be obtained by using replacement components rated for voltage, wattage, etc. Replacement parts which have these special safety characteristics are identified in this Service Manual.

Electrical components having such features are identified by marking with a ⚠ on the schematics and on the parts list in this Service Manual.

The use of a substitute replacement component which dose not have the same safety characteristics as the PIONEER recommended replacement one, shown in the parts list in this Service Manual, may create shock, fire, or other hazards.

Product Safety is continuously under review and new instructions are issued from time to time. For the latest information, always consult the current PIONEER Service Manual. A subscription to, or additional copies of, PIONEER Service Manual may be obtained at a nominal charge from PIONEER.

www.hifiengine.com

11. BLOCK DIAGRAM

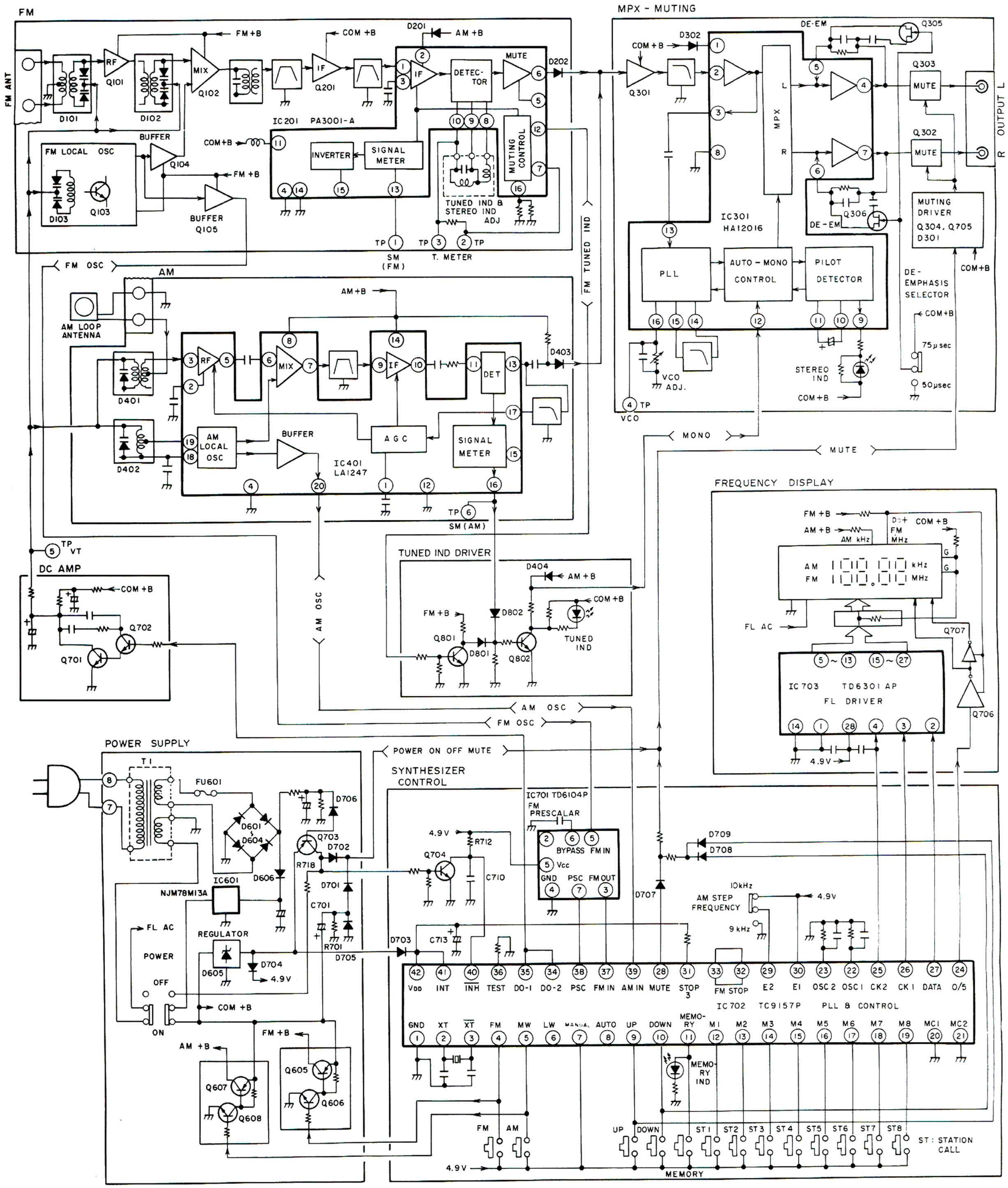

12. CIRCUIT DESCRIPTION

AM → FM

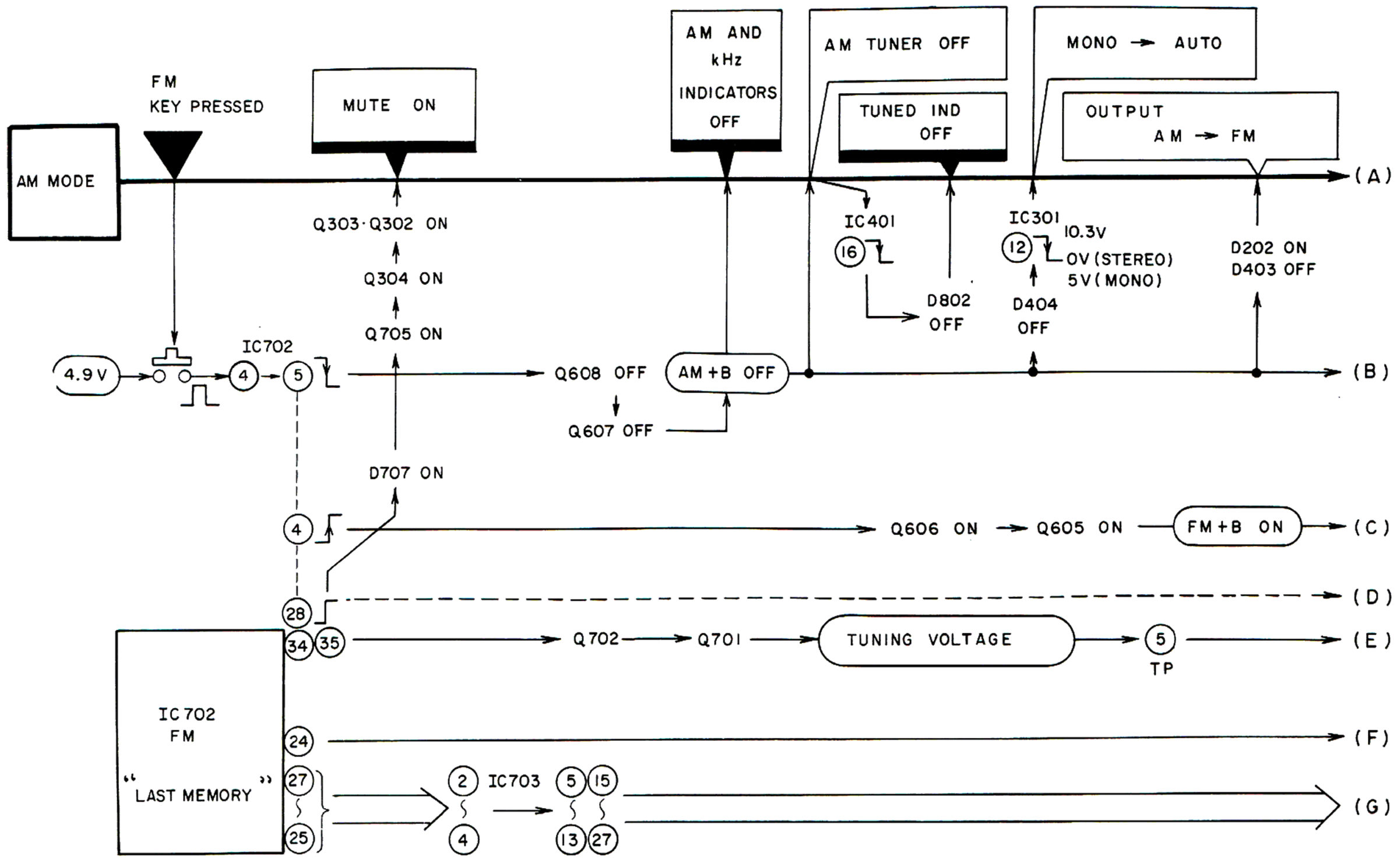

FM → AM

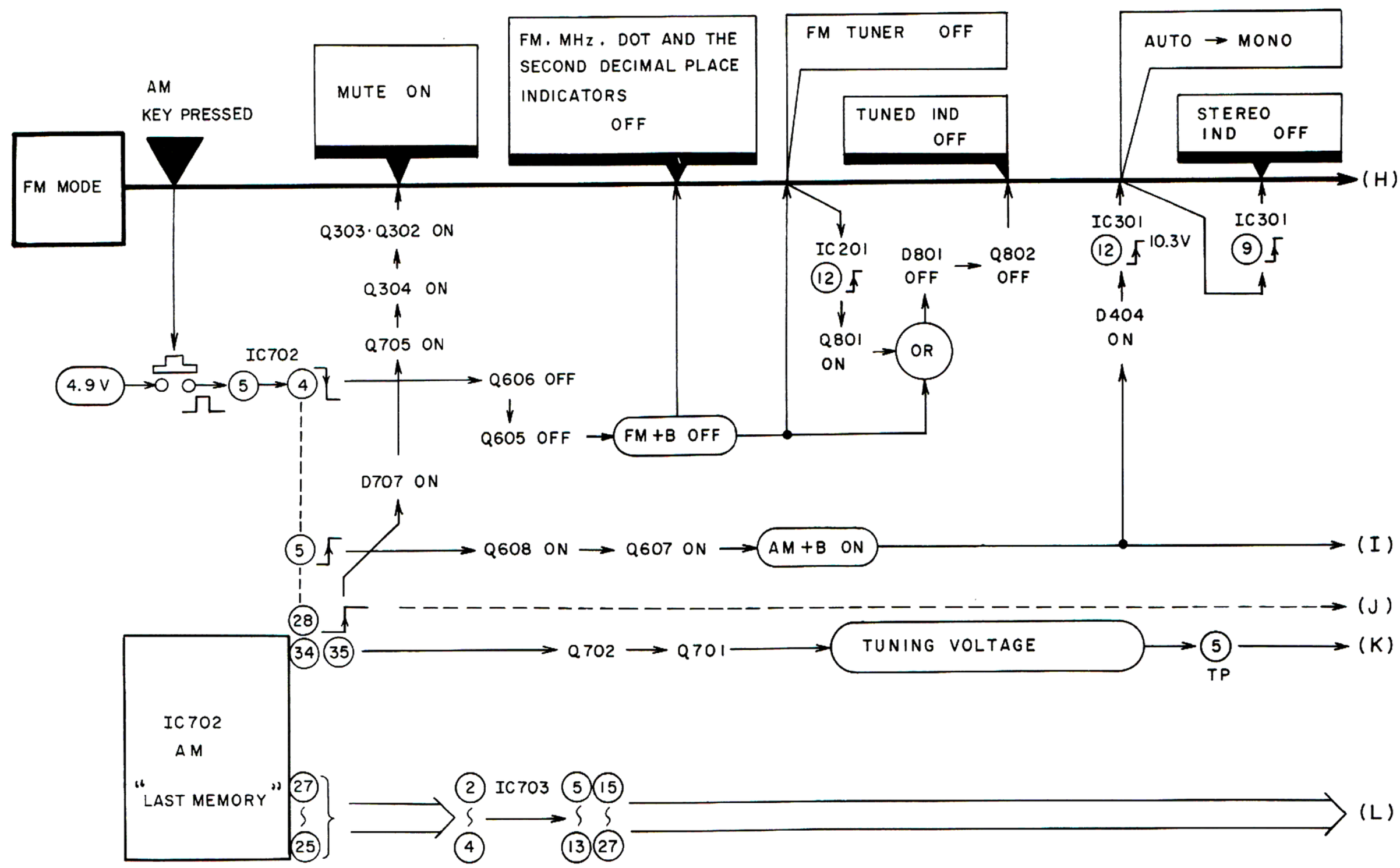

www.hifiengine.com

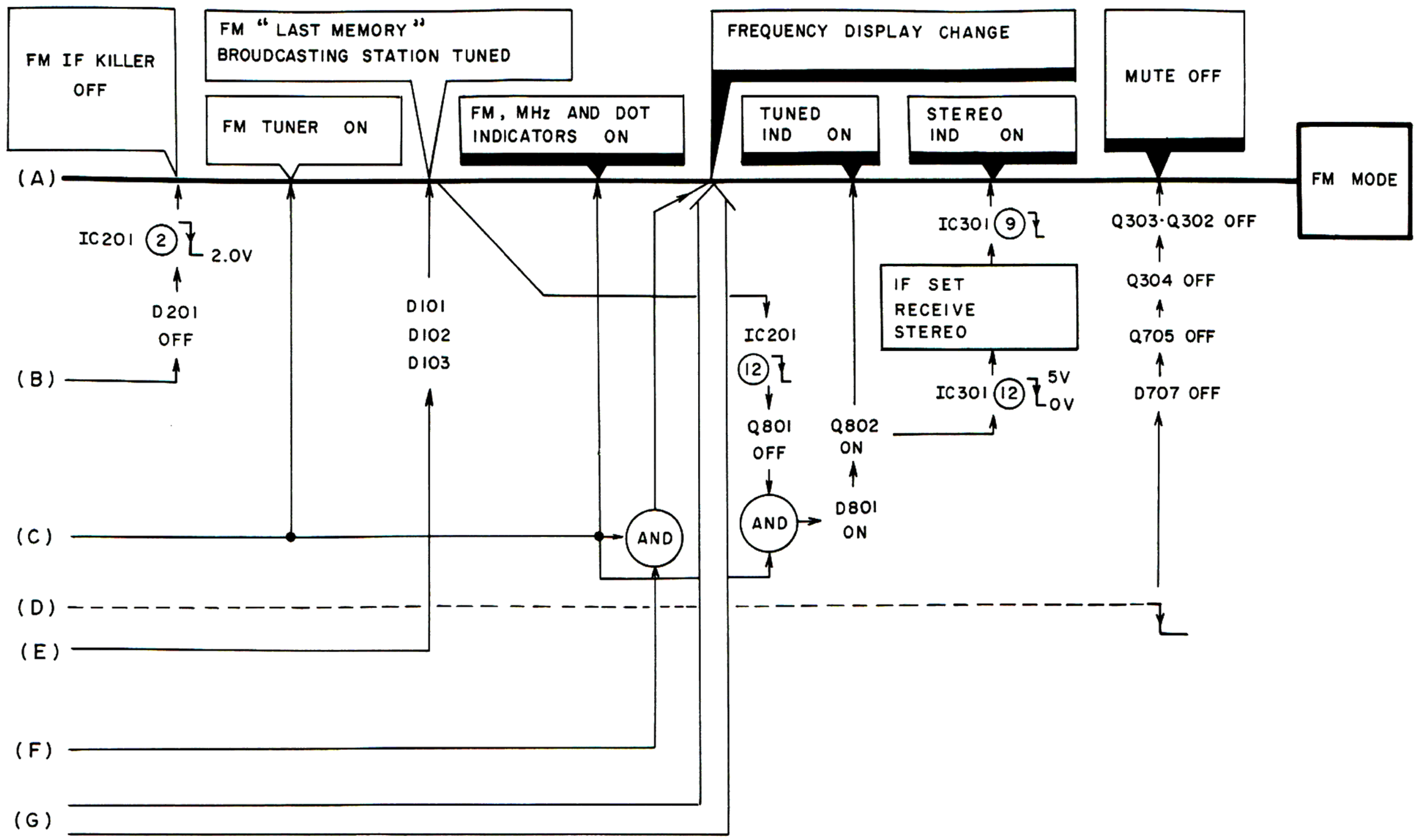

www.hifiengine.com

POWER ON

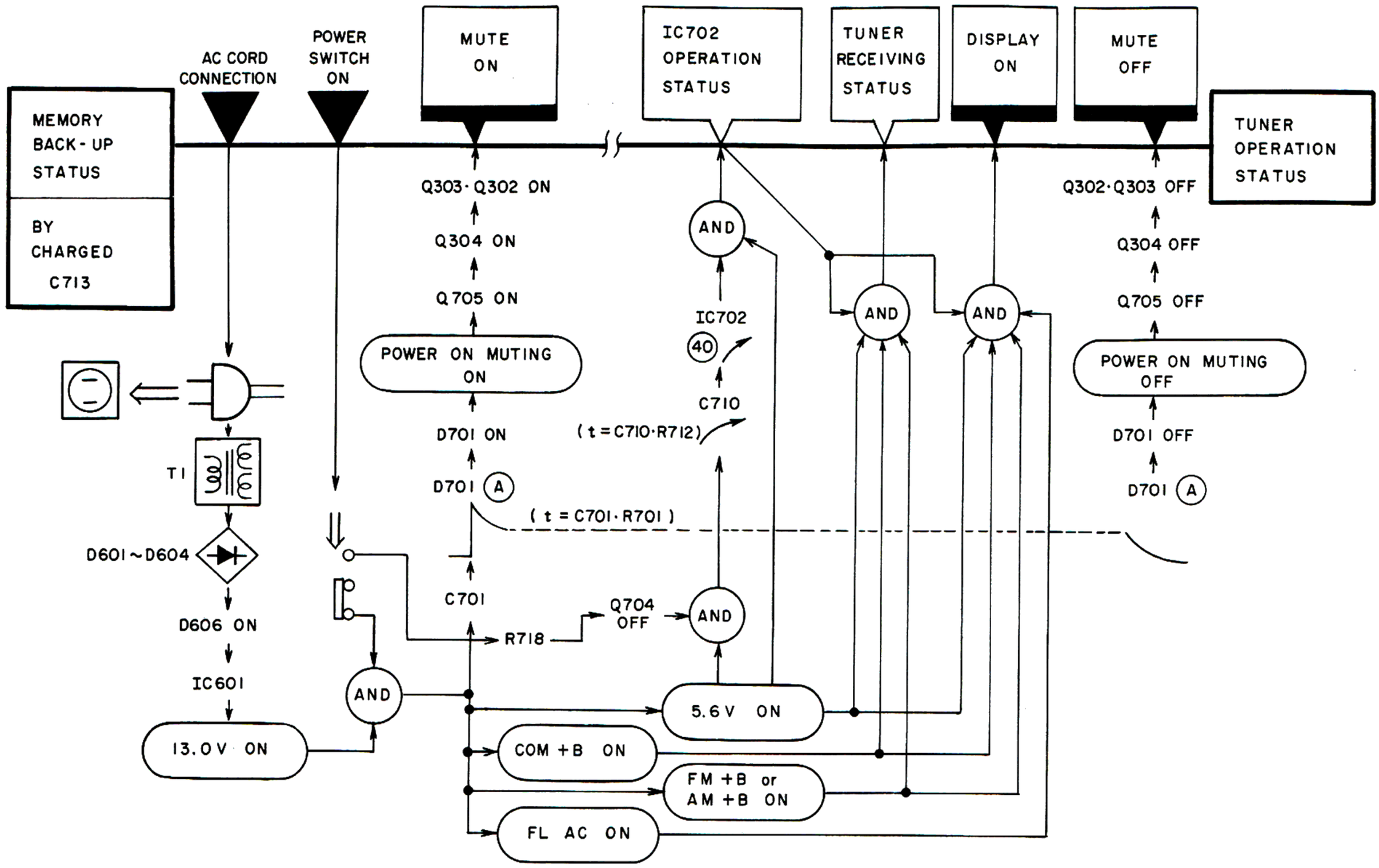

POWER OFF

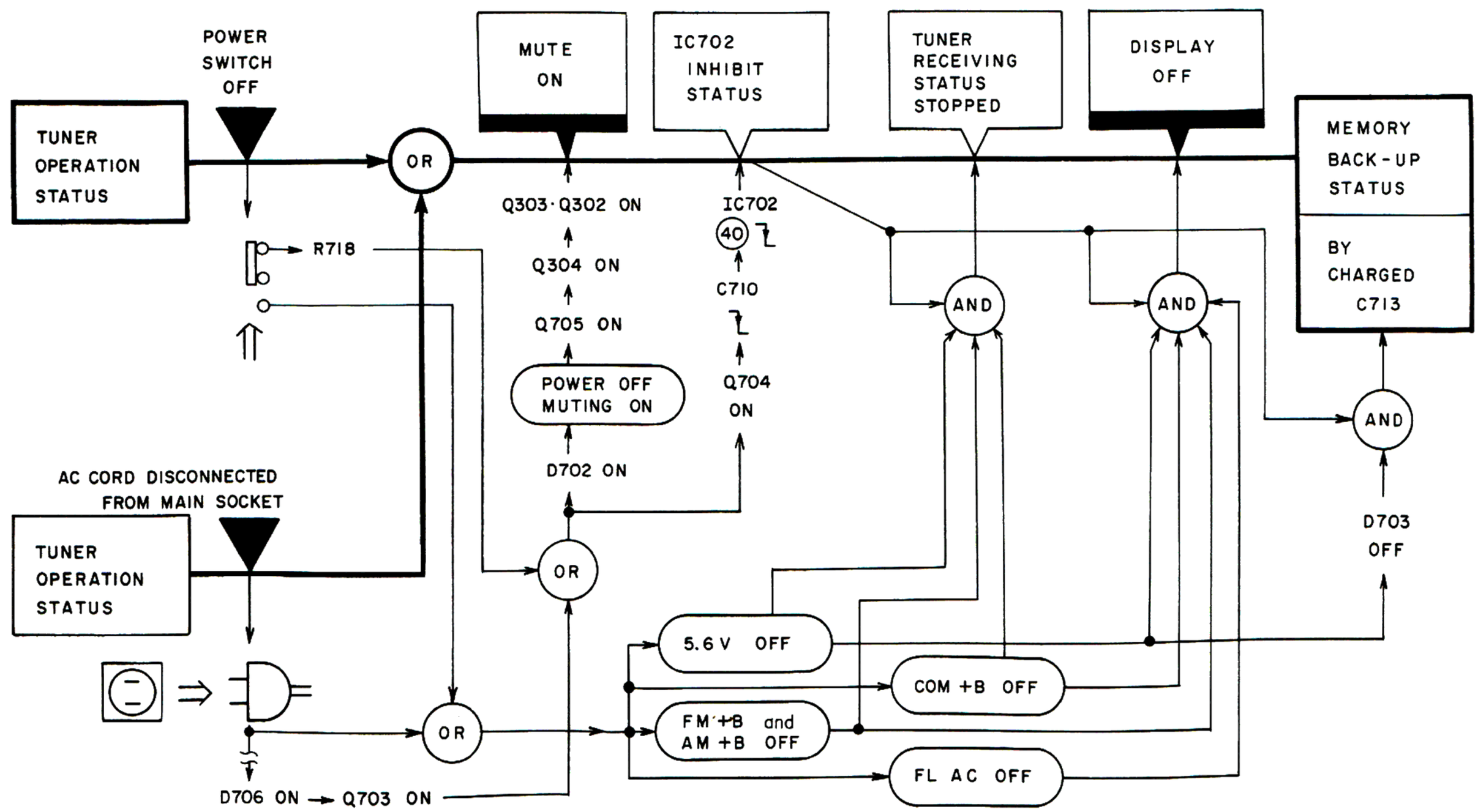

www.hifiengine.com

PIONEER®

SERVICE INFORMATION

No. SI-A85005
Date: October, 1984

MODEL: TX-301L, TX-950L, TX-200ZL, TX-201ZL, TX-950, TX-200Z, TX-201Z, TX-301

SUBJECT: Change of Capacitor in COMPLEX ASSEMBLY.

TX-200ZL, TX-201ZL series --- GWM-343
TX-201Z series ---------- GWM-347
TX-950L, TX-301L series ----- GWM-342
TX-950 series ---------- GWM-346

REASON: To spread FM Tracking Adjustment sphere. (T101)

C117 : 10pF CCDCH100D50 ——→ 8pF CCDCH080D50

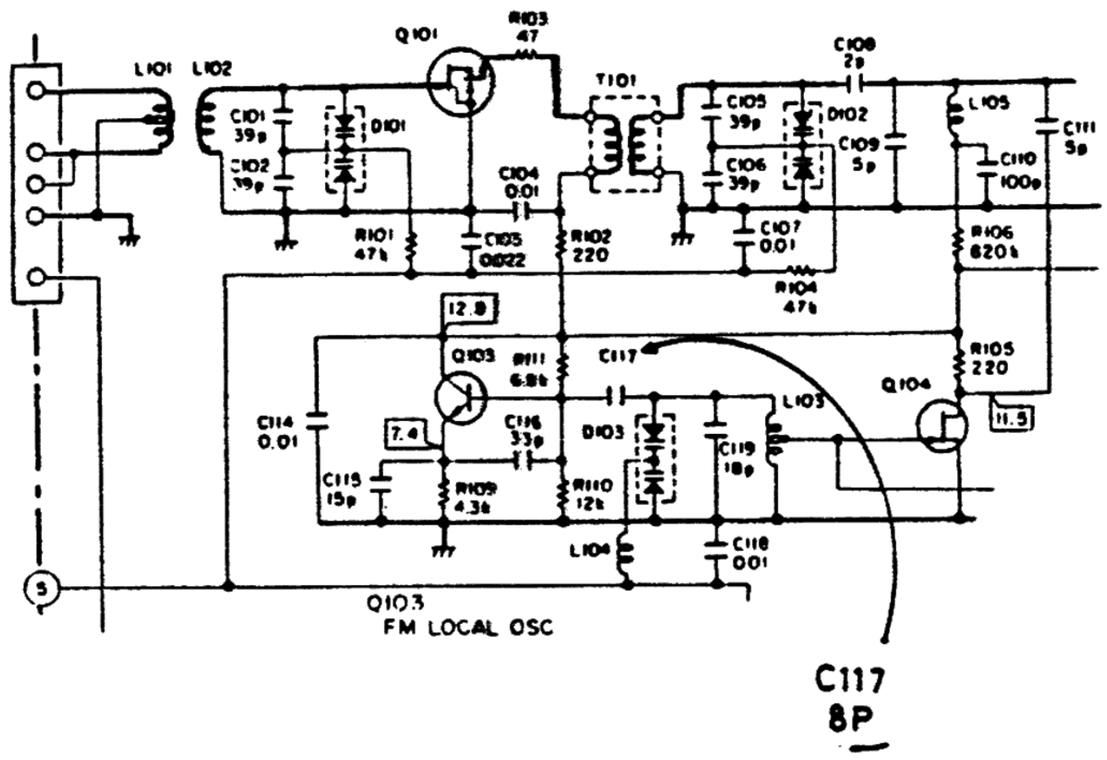

SERVICE MANUAL PAGE:

TX-201, TX-200ZL series	(ART-473)	-----	8
TX-201Z series	(ART-474)	-----	8
TX-950L, TX-301L series	(ART-470)	-----	3
TX-950 series	(ART-472)	-----	11

APPLICABLE SERIAL NO.:

TX-301L/HE	9401101~	TX-950/KU	3633101~	TX-950/SS	4000001~
TX-301L/HB	9500501~	TX-200Z/Z	6600001~	TX-200Z/ZS	6500101~
TX-950L/HE	9404101~	TX-200Z/ZEZ	0600101~	TX-950/YP	5500001~
TX-950L/HB	0904001~	TX-201Z/ZUCO	0402101~	TX-950/HEZ	9100001~
TX-200ZL/ZE	0504101~	TX-201Z/ZEZ	0603001~	TX-950/S	2600001~
TX-201ZL/ZB	0904101~	TX-301/HEZ	9100101~	TX-950/S/G	2900001~

POST OFFICE BOX 1760
LONG BEACH, CALIFORNIA 90801-1760
PHONE: 213/420-5700 FAX: (213)420-5902

(J-W-C)

PIONEER ELECTRONICS (USA) INC.
TECHNICAL INFORMATION CENTER

www.hifiengine.com

PIONEER®

SERVICE INFORMATION

No. SI-A85005
Date: October, 1984

MODEL: TX-301L, TX-950L, TX-200ZL, TX-201ZL, TX-950.
TX-200Z, TX-201Z, TX-301

SUBJECT: Change of Capacitor in COMPLEX ASSEMBLY.

TX-200ZL, TX-201ZL series --- GWM-343
TX-201Z series ---------- GWM-347
TX-950L, TX-301L series ----- GWM-342
TX-950 series ---------- GWM-346

REASON: To spread FM Tracking Adjustment sphere. (T101)

C117 : 10pF CCDCH100D50 ——→ 8pF CCDCH080D50

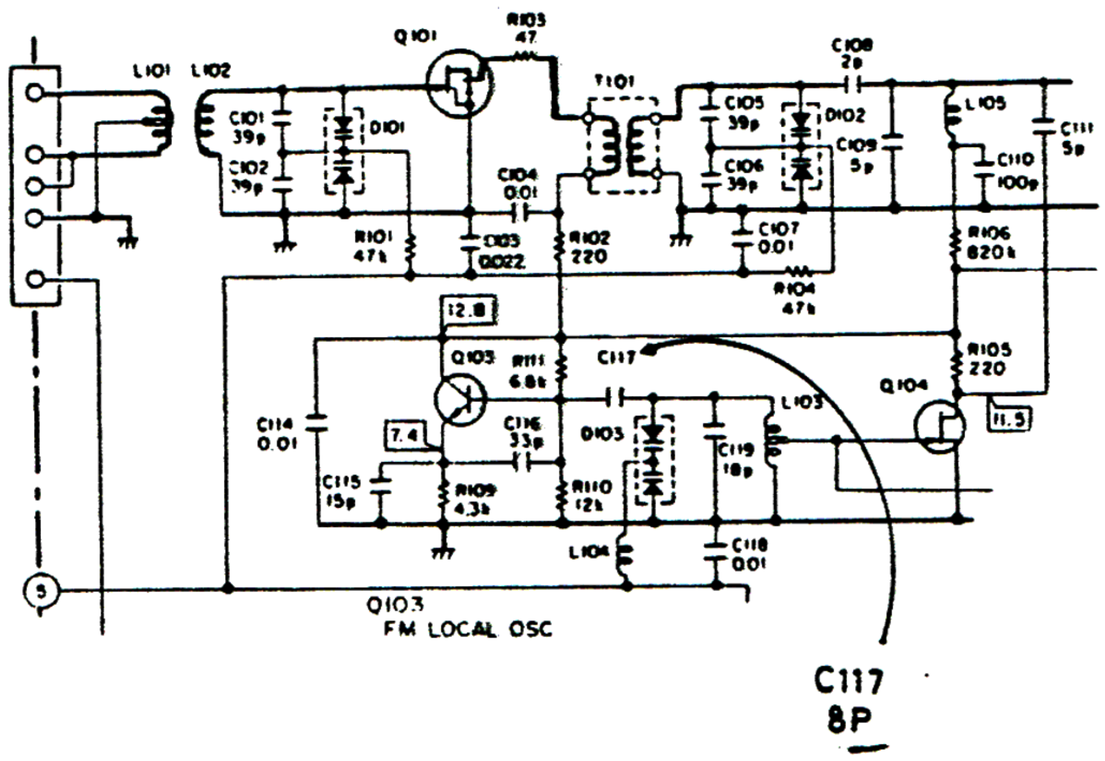

SERVICE MANUAL PAGE:

TX-201, TX-200ZL series	(ART-473)	-----	8
TX-201Z series	(ART-474)	-----	8
TX-950L, TX-301L series	(ART-470)	-----	3
TX-950 series	(ART-472)	-----	11

APPLICABLE SERIAL NO.:

TX-301L/HE	9401101~	TX-950/KU	3633101~	TX-950/SS	4000001~
TX-301L/HB	9500501~	TX-200Z/Z	6600001~	TX-200Z/ZS	6500101~
TX-950L/HE	9404101~	TX-200Z/ZEZ	0600101~	TX-950/YP	5500001~
TX-950L/HB	0904001~	TX-201Z/ZUCO	0402101~	TX-950/HEZ	9100001~
TX-200ZL/ZE	0504101~	TX-201Z/ZEZ	0603001~	TX-950/S	2600001~
TX-201ZL/ZB	0904101~	TX-301/HEZ	9100101~	TX-950/S/G	2900001~

POST OFFICE BOX 1760
LONG BEACH, CALIFORNIA 90801-1760
PHONE: 213/420-5700 FAX: (213)420-5902

(J-W-C)

PIONEER ELECTRONICS (USA) INC.
TECHNICAL INFORMATION CENTER

www.hifiengine.com

PIONEER®

SERVICE INFORMATION

No. SI-A84051
Date: June, 1984

CORRECTION TO SERVICE MANUAL

MODEL: TX-950 [ARP-472]

PAGE: 6

KEY NO. : 5

DESCRIPTION: Knob cap

Please correct Service Manual as follows:

Knob cap : ADD-778 ⟶ AAD-778

ORIGINAL

Parts List of Exploded View

Mark	No.	Part No.	Description
	1.	GWM-346	Complex assembly
	2.	AWS-163	Switch assembly
⚠ ★★	3.	AEK-118	Fuse (0.8A/125V)
	4.	ANM-602	Front panel assembly
	5.	ADD-778	Knob cap
	6.	AAC-059	Knob (POWER)
	7.	ABH-134	Coiled spring
	8.	ANE-475	Bonnet case
	9.	AEC-903	Leg assembly
⚠	10.	ADG-073	AC power cord
	11.	BBT30P080FZK	Screw (3 x 8)
	12.	BBZ30P080FZK	Screw (3 x 8)
	13.	VMZ30P060FMC	Screw (3 x 6)
	101.		Chassis
	102.		Rear panel
	103.		LED assembly

CORRECTION

Parts List of Exploded View

Mark	No.	Part No.	Description
	1.	GWM-346	Complex assembly
	2.	AWS-163	Switch assembly
⚠ ★★	3.	AEK-118	Fuse (0.8A/125V)
	4.	ANM-602	Front panel assembly
	5.	AAD-778	Knob cap
	6.	AAC-059	Knob (POWER)
	7.	ABH-134	Coiled spring
	8.	ANE-475	Bonnet case
	9.	AEC-903	Leg assembly
⚠	10.	ADG-073	AC power cord
	11.	BBT30P080FZK	Screw (3 x 8)
	12.	BBZ30P080FZK	Screw (3 x 8)
	13.	VMZ30P060FMC	Screw (3 x 6)
	101.		Chassis
	102.		Rear panel
	103.		LED assembly

POST OFFICE BOX 1760
LONG BEACH, CALIFORNIA 90801
PHONE: 213/420-5700 FAX: (213)420-5902

(J-B-C)

PIONEER ELECTRONICS (USA) INC.
TECHNICAL INFORMATION CENTER

PIONEER®

SERVICE INFORMATION

No. SI-A85023-A
Date: June, 1985

PLEASE DISCARD SI-A85023, ISSUED IN APRIL

MODEL: TX-950 (ARP-472)

PAGE: 5

Please correct service manual as follows:

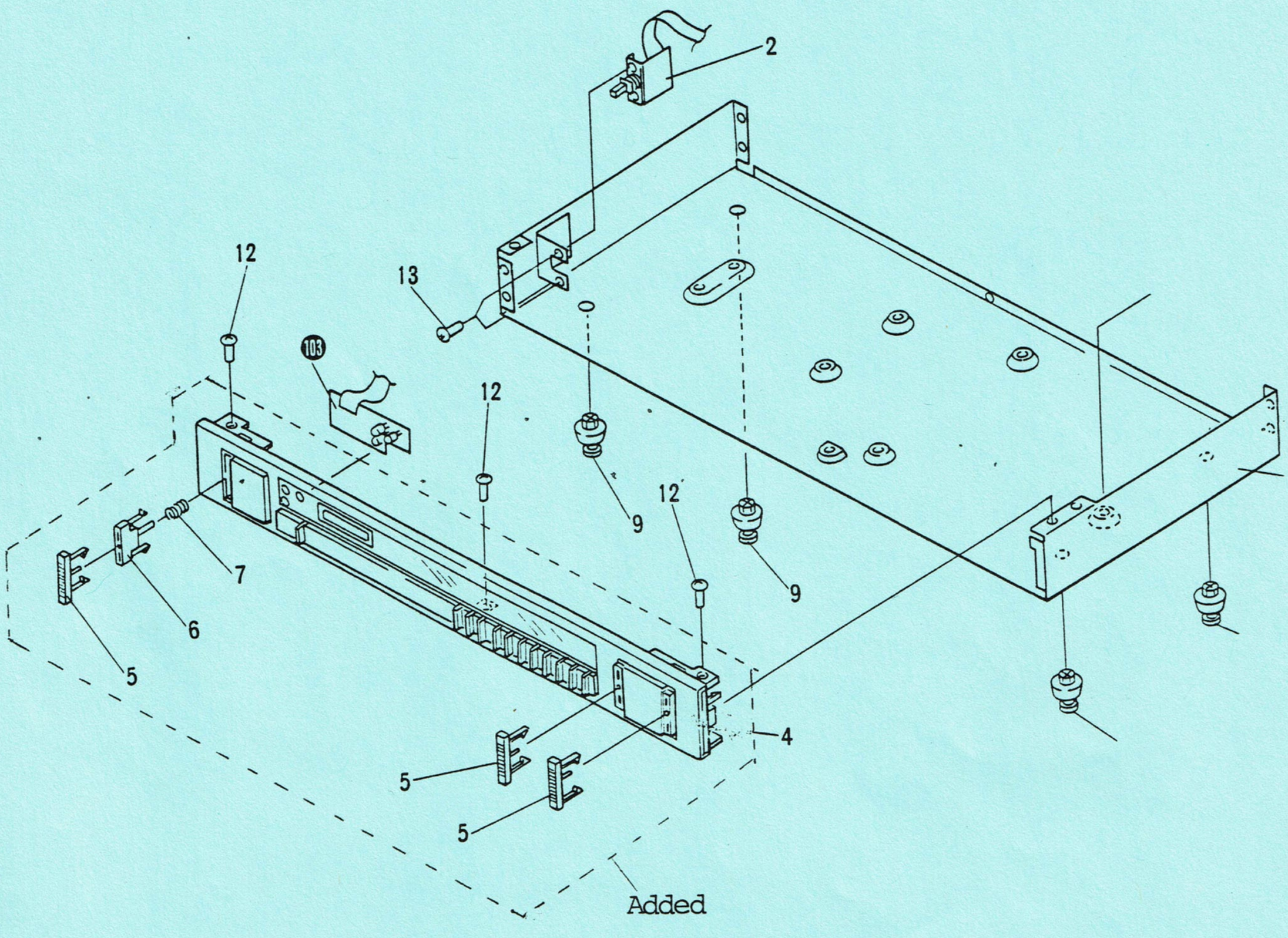

Front Panel Ass'y (ANM-602) includes the following parts:

Q'ty	Key	Part #	Description
3	5	AAD-778	Knob cap
1	6	AAC-059	Knob (POWER)
1	7	ABH-134	Coiled spring

(J-B-C)

POST OFFICE BOX 1760
LONG BEACH, CALIFORNIA 90801-1760
PHONE: 213/420-5700 FAX: (213) 420-5902

PIONEER ELECTRONICS (USA) INC.
TECHNICAL INFORMATION CENTER