Technics TAPE DECK MODEL RS-M17 SCHEMATIC DIAGRAM

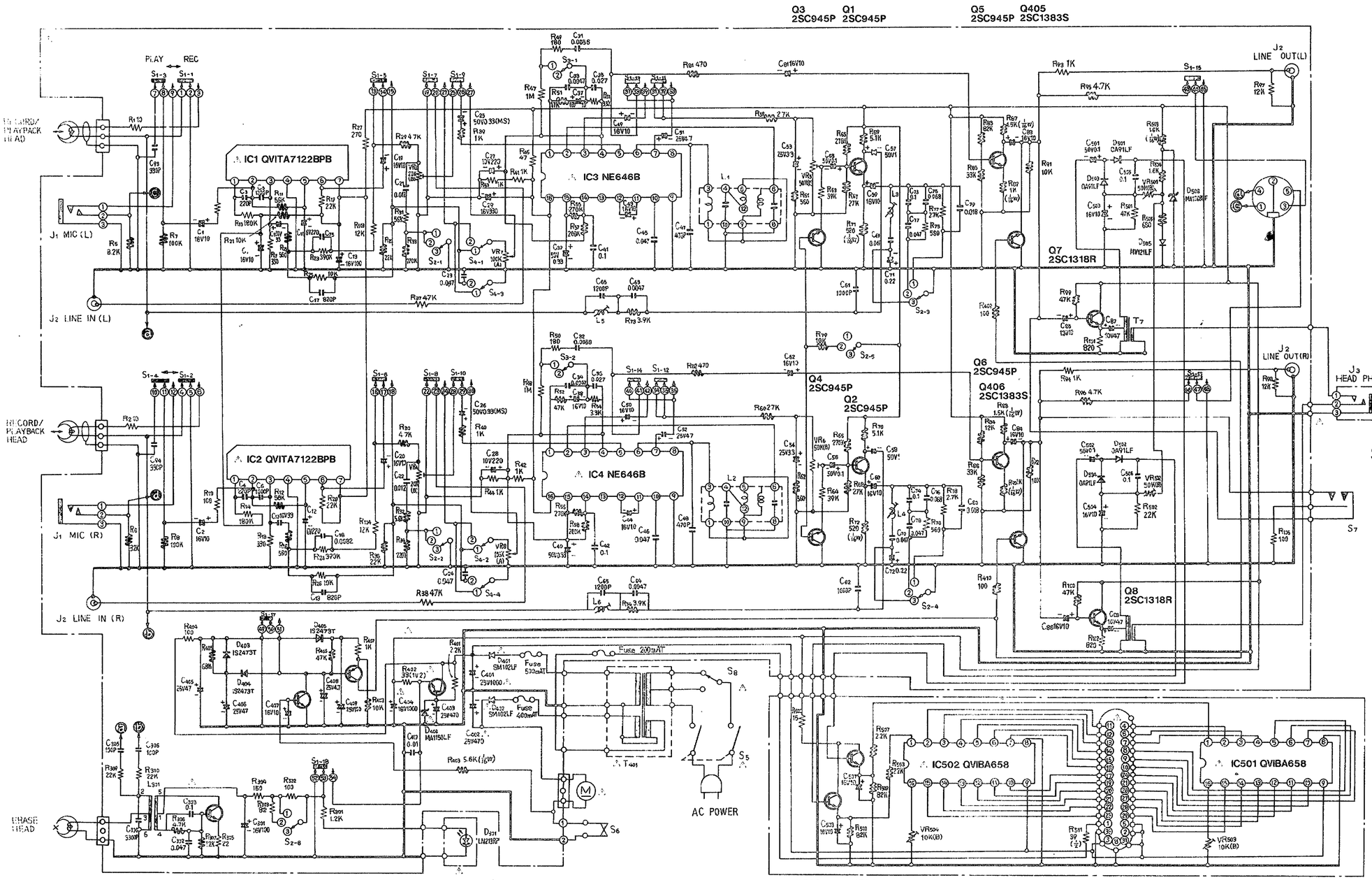

SWITCHES

1. S_{1-1} - S_{1-18} RECORD SW PLAYBACK
2. S_{2-1} - S_{2-6} EQUALIZER BIAS SELECT SW
3. S_{3-1} - S_{3-2} DOLBY SW
4. S_{4-1} - S_{4-4} IN PUT SELCT
5. S_5 POWER SW
6. S_6 MOTER MUTING SW
7. S_7 CUE REVIEW MUTING SW
8. S_8 VOLTAGE SELECT SW

- ⚠ indicates that only parts specified manufacturer be used for replacement in critical circuits.
- This schematic diagram is subject to change.

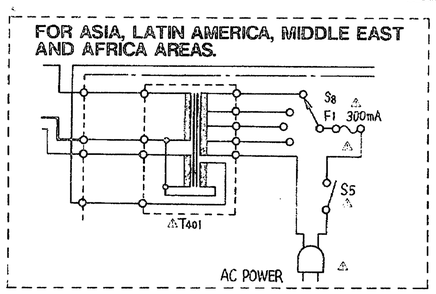

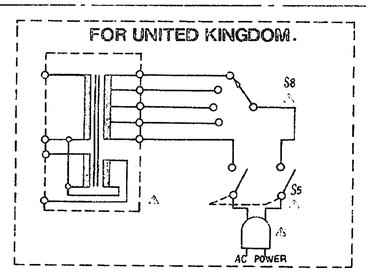

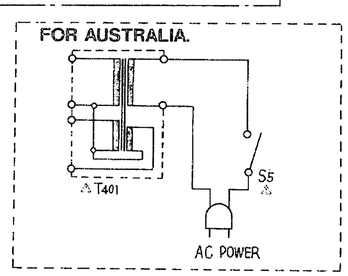

QQD0489 F0479H019 Printed in Japan