ORDER NO. HAD84022713C1

Service Manual

FM/AM Stereo Receiver

SA-120

[M], [MC]

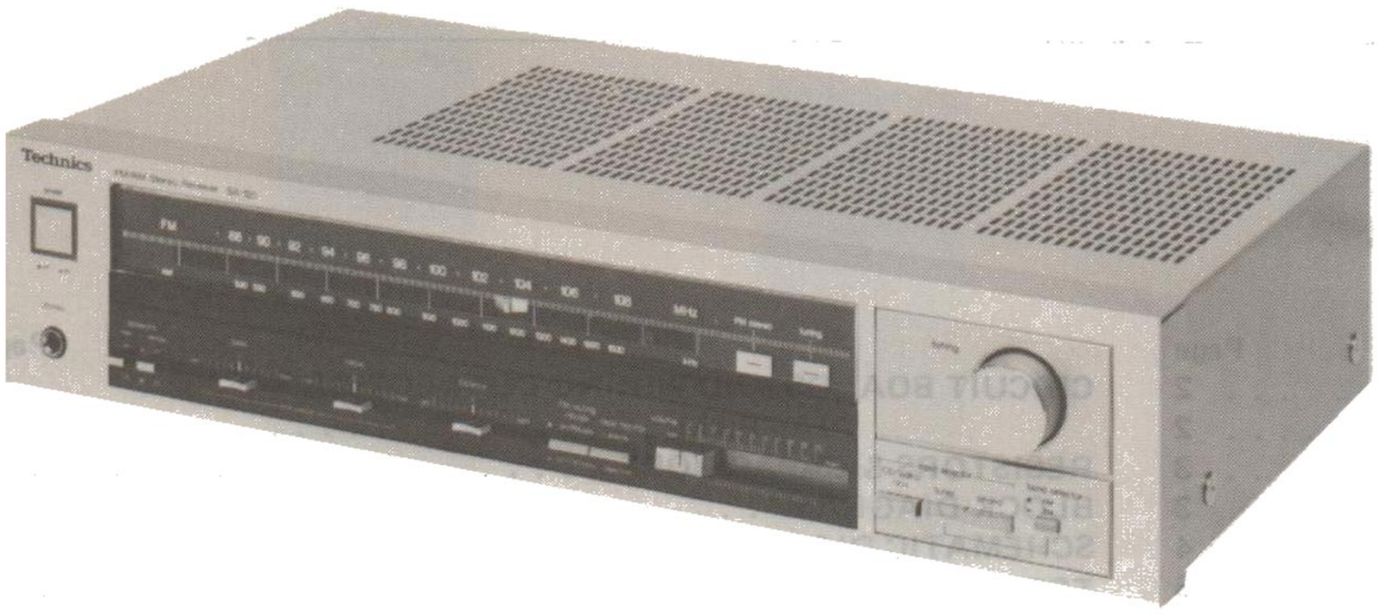

Areas

* [M] is available in the U.S.A.
* [MC] is available in Canada.

Specifications

(Specifications are subject to change without notice for further improvement.)
(Weights and dimensions shown are approximate.)

(IHF '78)

■ AMPLIFIER SECTION

Rated minimum sine wave RMS power output
40 Hz~20 kHz both channels driven
0.5% total harmonic distortion
35W per channel (8 ohms)

1 kHz continuous power output	
both channels driven	
0.5% total harmonic distortion	
	38W per channel (8 ohms)
Dynamic headroom	1.0 dB (8 ohms)
Total harmonic distortion	
rated power at 40 Hz~20 kHz	0.5% (8 ohms)
half power at 1 kHz	0.07% (8 ohms)
SMPTE intermodulation distortion	0.5% (8 ohms)
Frequency response	
PHONO	RIAA standard curve ±0.8 dB
TAPE/AUX	5 Hz~70 kHz, −3 dB
Input sensitivity	
PHONO	0.45 mV (2.5 mV, IHF '66)
TAPE/AUX	25 mV (150 mV, IHF '66)
S/N (IHF, A)	
PHONO	73 dB (71 dB, IHF '66)
TAPE/AUX	82 dB (95 dB, IHF '66)
Maximum input voltage	
PHONO	120 mV (130 mV, 1 kHz)
Input impedance	
PHONO	47 kilohms
TAPE/AUX	18 kilohms
Tone controls	
BASS	50 Hz, +10 dB~ −10 dB
TREBLE	20 kHz, +10 dB~ −10 dB
Loudness control (volume at −30 dB) (built-in)	
	50 Hz, +5 dB
Low frequency damping factor	30 (8 ohms)
Load impedance	
MAIN or REMOTE	8~ 16 ohms
MAIN and REMOTE	8~ 16 ohms

■ FM TUNER SECTION

Frequency range	88~108 MHz
Sensitivity	10.8 dBf (1.9 μV, IHF '58)
50 dB quieting sensitivity	
MONO	16.1 dBf (3.5 μV IHF '58)
STEREO	38.3 dBf (45 μV IHF '58)
Total harmonic distortion	
100 Hz	0.15% (MONO), 0.3% (STEREO)
1 kHz	0.15% (MONO), 0.3% (STEREO)
6 kHz	0.3% (MONO), 0.4% (STEREO)
S/N	
MONO	76 dB
STEREO	70 dB
Frequency response	20 Hz~15 kHz, +1 dB, −2 dB
Alternate channel selectivity	60 dB
Capture ratio	1 dB
Image rejection at 98 MHz	40 dB
IF rejection at 98 MHz	60 dB
Spurious response rejection at 98 MHz	70 dB
AM suppression	50 dB
Stereo separation	
1 kHz	40 dB
10 kHz	30 dB
Carrier leak	
19 kHz	−35 dB
38 kHz	−50 dB
Antenna terminals	300 ohms (balanced)
	75 ohms (unbalanced)

Technics

Matsushita Engineering and Service Company
50 Meadowland Parkway,
Secaucus,
New Jersey 07094

Panasonic Hawaii, Inc.
91-238 Kauhi St., Ewa Beach
P.O. Box 774
Honolulu, Hawaii 96808-0774

Matsushita Electric of Canada Limited
5770 Ambler Drive, Mississauga,
Ontario, L4W 2T3

Panasonic Sales Company Division of Matsushita Electric of Puerto Rico, Inc.
Ave, 65 De Infanteria, KM 9.7
Victoria Industrial Park
Carolina, Puerto Rico 00630

www.hifiengine.com

■ AM TUNER SECTION

Frequency range	525~1605 kHz
Sensitivity	20 μV, 300 μV/m
Selectivity	27 dB
Image rejection at 1000 kHz	40 dB
IF rejection at 1000 kHz	55 dB

■ GENERAL

Power consumption	150W
Power supply	AC 120V, 60 Hz
Dimensions (W×H×D)	430 × 97 × 249 mm (16-15/16" x 3-13/16" x 9-13/16")
Weight (for USA)	4.9 kg (10.8 lb.)
(for Canada)	5 kg (11 lb.)

■ CONTENTS

	Page
PROTECTION CIRCUITRY	2
BEFORE REPAIR AND ADJUSTMENT	2
SAFETY PRECAUTION	3
HOW TO USE THE AM LOOP ANTENNA	3
LOCATION OF CONTROLS	4
DISASSEMBLY INSTRUCTIONS	5, 6
DIAL CORD INSTALLATION GUIDE	6
MEASUREMENTS AND ADJUSTMENTS	7, 8
CIRCUIT BOARDS AND WIRING CONNECTION DIAGRAM	9, 10
RESISTORS & CAPACITORS	11
BLOCK DIAGRAM	12, 13
SCHEMATIC DIAGRAM	14 ~ 19
TERMINAL GUIDE OF TRANSISTORS, DIODES AND IC'S	19
REPLACEMENT PARTS LIST	20
EXPLODED VIEW	21, 22

■ PROTECTION CIRCUITRY

The protection circuitry may have operated if either of the following conditions is noticed:

- No sound is heard when the power is turned on.
- Sound stops during a performance.

The function of this circuitry is to prevent circuitry damage if, for example, the positive and negative speaker connection wires are "shorted", or if speaker systems with an impedance less than the indicated rated impedance of this unit are used.

If this occurs, follow the procedure outlines below:

1. Turn off the power.
2. Determine the cause of the problem and correct it.
3. Turn on the power once again after one minute.

Note

When the protection circuitry functions, the unit will not operate unless the power is first turned off and then on again.

■ BEFORE REPAIR AND ADJUSTMENT

1. Turn off the power supply and short-circuit of power supply capacitors (C701 and C702, 4700μF) at resistance (about 10Ω, 5W) in order to discharge the charged voltage. Do not short between C701 and C702 by screwdriver. It may damage the component.
2. Before turning on the power supply after completion of repair, slowly apply the primary voltage by using a power supply voltage controller to make sure that the consumed current at 120V, 60Hz in no-signal mode is 150 ~ 400mA.

www.hifiengine.com

■ SAFETY PRECAUTION

1. Before servicing, unplug the power cord to prevent an electric shock.
2. When replacing parts, use only manufacturer's recommended components for safety.
3. Check the condition of the power cord. Replace if wear or damage is evident.
4. After servicing, be sure to restore the lead dress, insulation barriers, insulation papers, shields, etc.
5. Before returning the serviced equipment to the customer, be sure to make the following insulation resistance test to prevent the customer from being exposed to a shock hazard.

• INSULATION RESISTANCE TEST

1. Unplug the power cord and short the two prongs of the plug with a jumper wire.
2. Turn on the power switch.
3. Measure the resistance value with ohmmeter between the jumpered AC plug and each exposed metal cabinet part, such as screwheads antenna, control shafts, handle brackets, etc. Equipment with antenna terminals should read between 3MΩ and 5.2MΩ to all exposed parts. (Fig. A) Equipment without antenna terminals should read approximately infinity to all exposed parts. (Fig. B)

Note: Some exposed parts may be isolated from the chassis by design. These will read infinity.

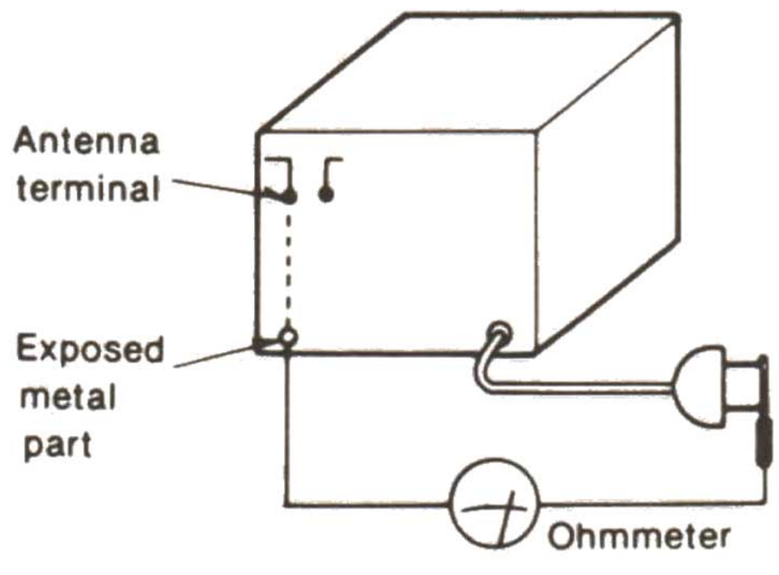

(Fig. A)

Resistance = 3MΩ—5.2MΩ

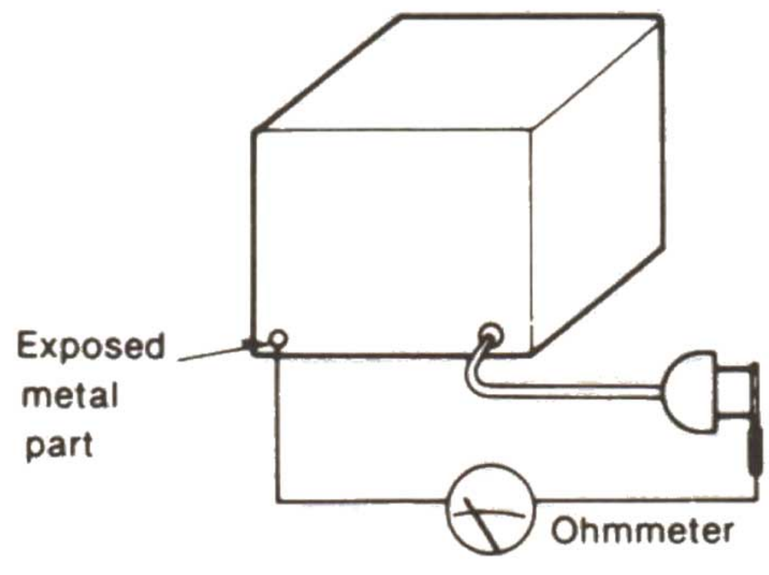

(Fig. B)

Resistance = Approx ∞

4. If the measurement is outside the specified limits, there is a possibility of a shock hazard. The equipment should be repaired and rechecked before it is returned to the customer.

■ HOW TO USE THE AM LOOP ANTENNA

This unit includes an AM loop antenna. No outdoor antenna is necessary unless the broadcast signals in your area are especially weak. (Connect the loop antenna even if an outdoor antenna is used; if it is not connected, AM reception will not be possible.)

> Pay attention to the following points when attaching the antenna.
> 1) Do not attach it horizontally (to do so would impair reception).
> 2) Do not attach it close to metal surfaces (to do so would result in noise).
> 3) Do not attach it close to power cords, speaker wires, etc. (to do so would result in noise).
> 4) Do not attach it close to a tape deck (when the tape deck is being used, chirping or beeping sounds may be received).

Steps

1. Connect the AM loop antenna to the AM antenna terminals located on the rear panel of the unit.
2. Find the height and direction of the antenna where reception is best and then fix it vertically to the wall, rack, etc.

1) When attaching the antenna to a wall, column or rack.

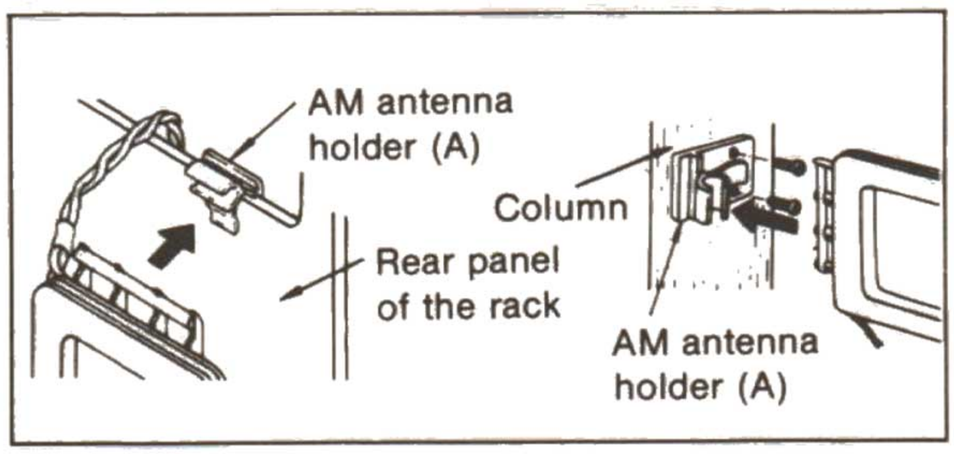

2) When attaching the antenna to the unit.

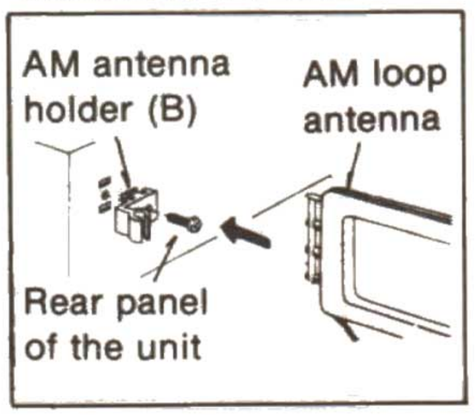

Note:
The installation of the antenna to the unit may cause impaired reception or result in signal noise. If possible, attach the antenna to the rack, a wall, or a column.

3. Move the antenna toward the right or left to find the point of best reception.

www.hifiengine.com

■ LOCATION OF CONTROLS

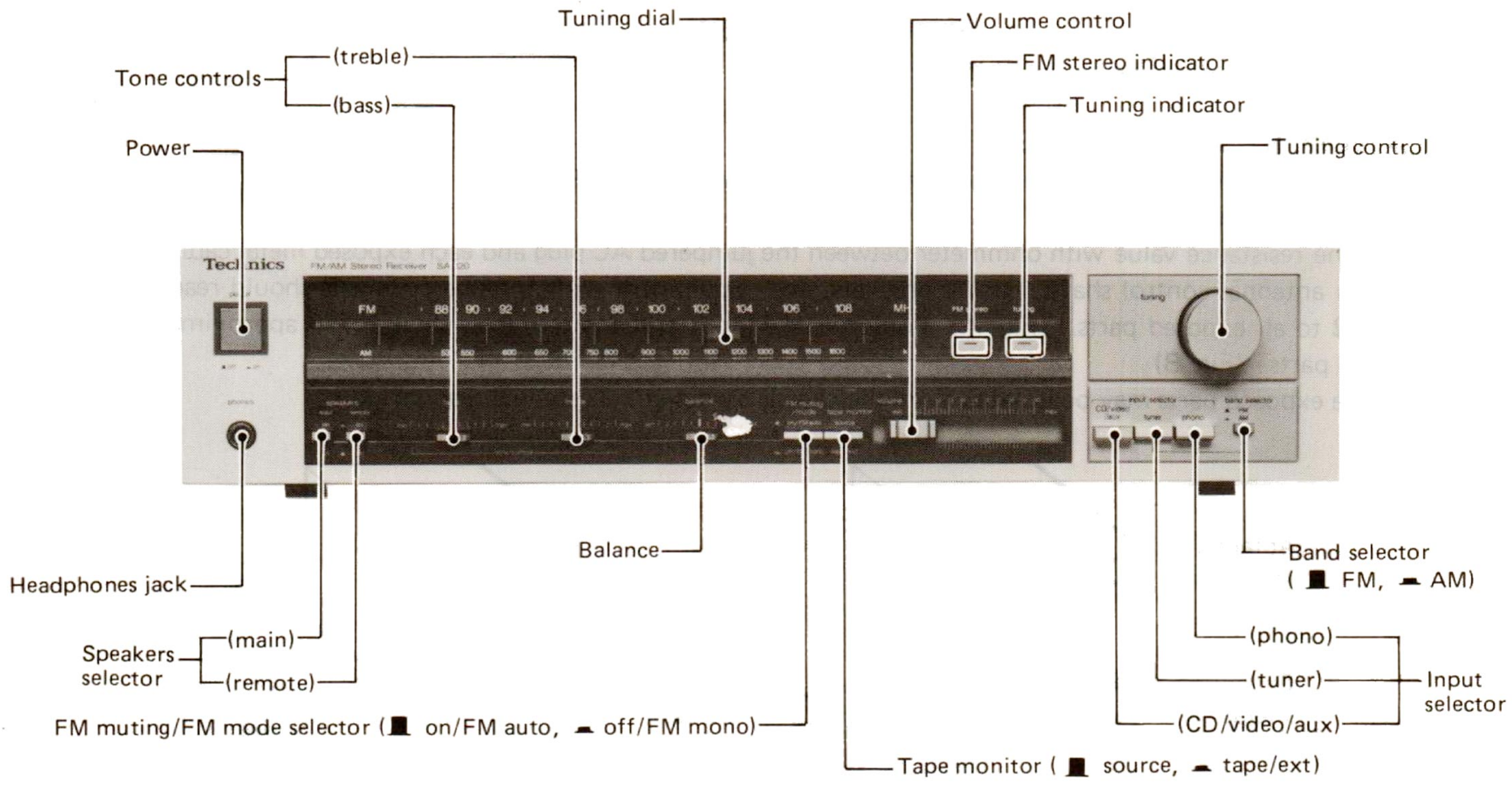

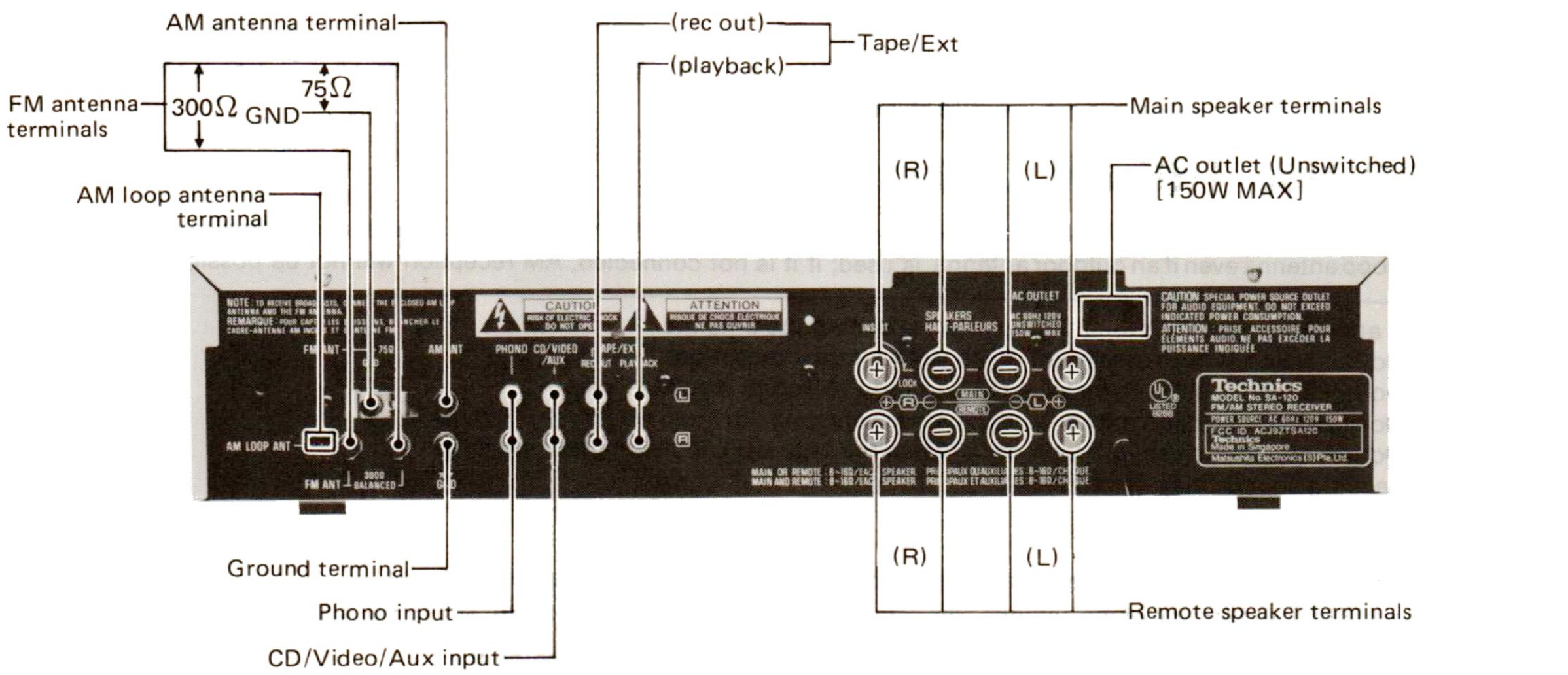

- Phono input capacitance is about 150pF.
- Series connection method is employed for the main and remote speaker connections of this set. Therefore, if both speaker changeover switches (main and remote) are turned "on" with the speaker unit connected only to main or remote speaker terminal, then no output signal will be delivered from the speaker unit.

www.hifiengine.com

■ DISASSEMBLY INSTRUCTIONS

- **How to remove the cabinet**

1. Remove the 6 setscrews (Fig. 1:❶~❻) of the cabinet.

- **How to remove the bottom board**

1. Remove the cabinet.
2. Remove the 10 setscrews (Fig. 2 : ❼ ~ ⓰) of the bottom board.

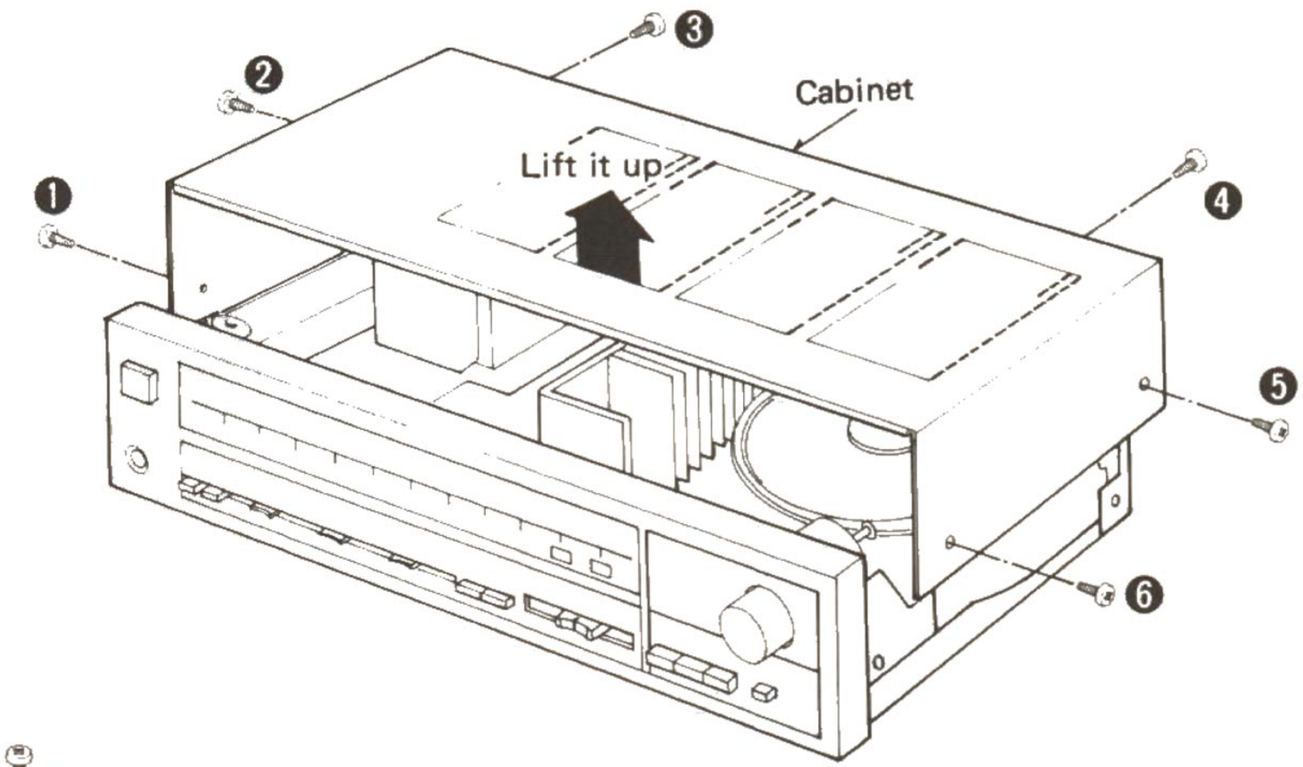

Fig. 1

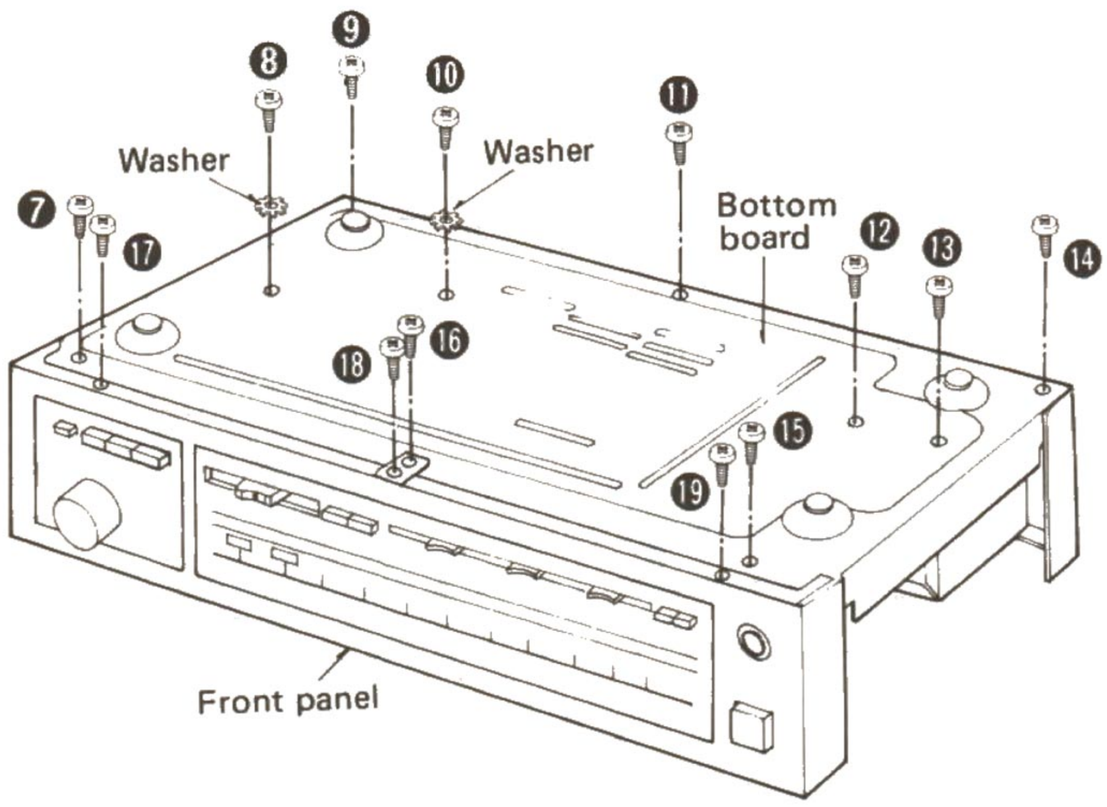

Fig. 2

- **How to remove the front panel**

1. Remove the cabinet.
2. Remove the 3 setscrews (Fig. 2: ⓱ ~ ⓳) of the front panel.
3. The claws projected (at 5 portions) from the front panel are engaged with the front sub-panel.
   Disengage the claws from by screwdriver or the like to remove the front sub-panel. (See Fig. 3)

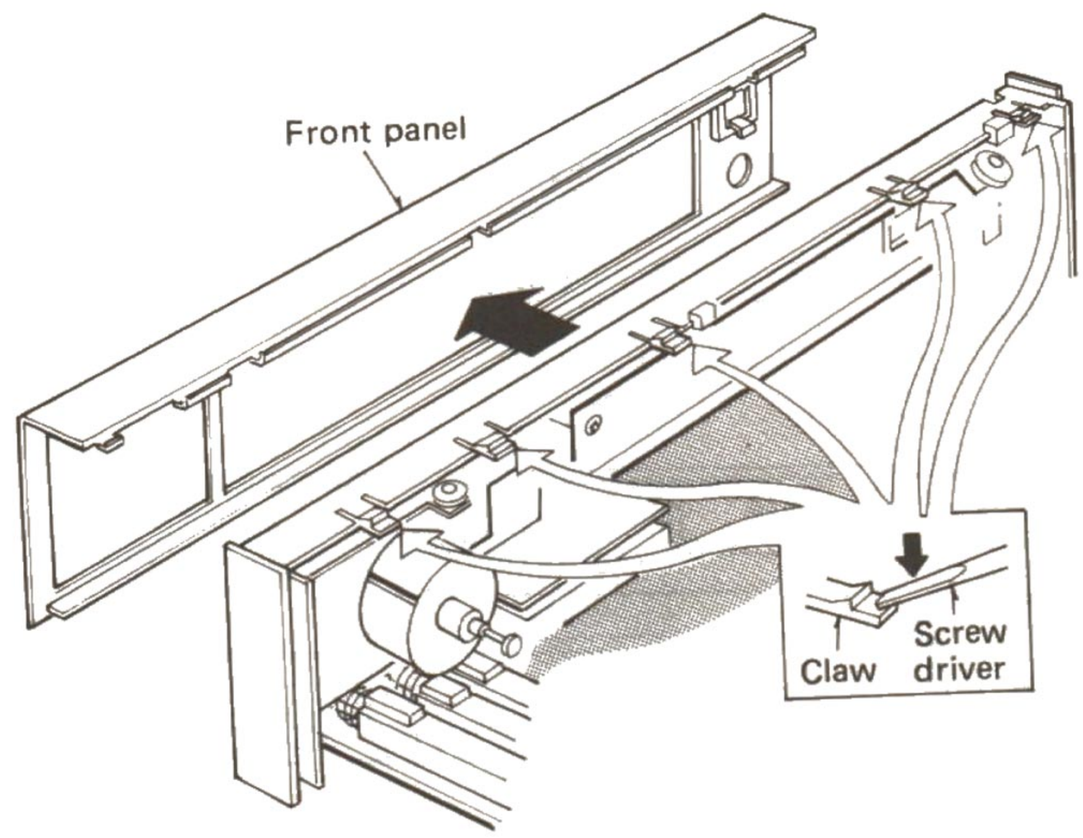

Fig. 3

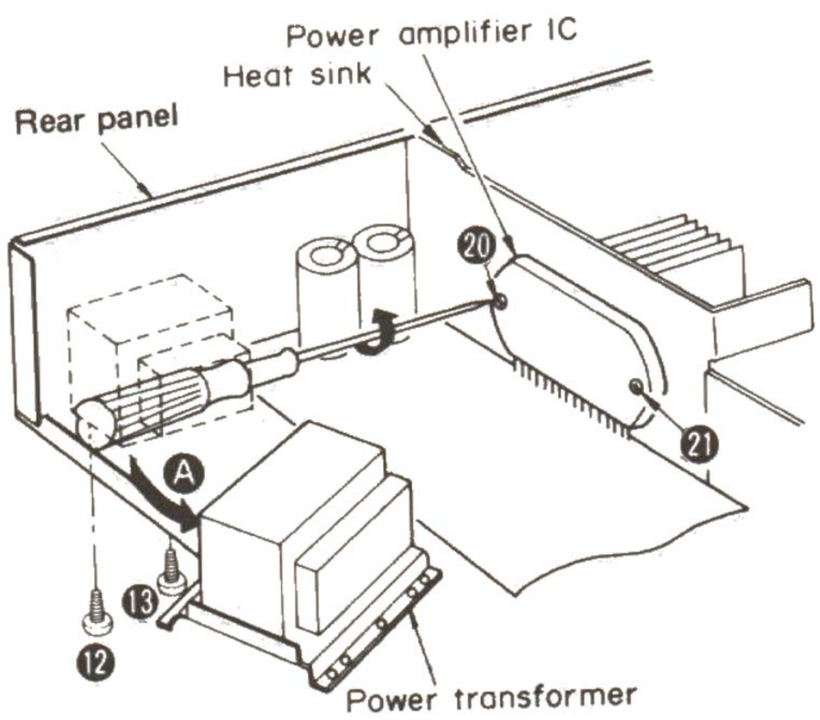

Fig. 4

- **How to remove the power amplifier IC**

1. Remove the cabinet and bottom board.
2. Remove the 2 setscrews (Fig. 4 : ⓬, ⓭) to detach the power transformer from rear panel in the direction of arrow Ⓐ.
3. Unsolder of power amplifier IC.
4. Remove the 2 setscrews (Fig. 4 : ⓴, ㉑) used to secure the power amplifier IC on the heat sink, and then pull the power amplifier IC.
5. When mounting the power amplifier IC, apply silicone compound (SZZ0L15) to the rear side of power amplifier IC, and then follow the steps 1 ~ 4 reversely.

www.hifiengine.com

- **How to remove the slide volume.**

1. Remove the cabinet and bottom board.
2. Set the dial to the start position (minimum frequency), then stick a cellophane tape to the contact Ⓑ of dial cord (Fig. 5) so that the dial drum will not come loose from the dial cord.
3. Remove the 1 setscrew (Fig. 5 : ㉒) from the dial drum.
4. Remove the dial cord from the pulley. (Fig. 5 : Ⓒ)
5. Remove the 3 setscrews (Fig. 6 : ㉓ ~ ㉕) and 1 connector (Fig. 6: ㉖)
6. Remove the front panel in the direction of the arrow as in Fig 7.
7. The claws projected (at 4 portions) from the slide volume printed circuit board are engaged with the slide volume. Disengage the claws from by screw driver or the like to remove the slide volume case. (Fig. 8)
8. Unsolder the slide volume.

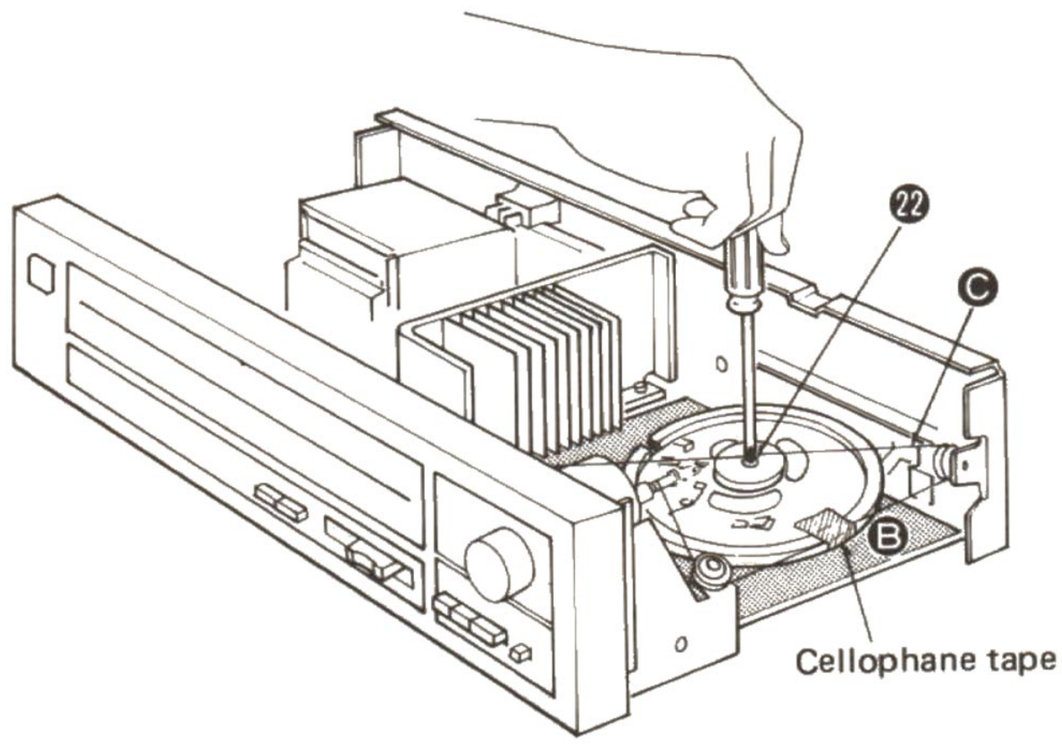

Fig. 5

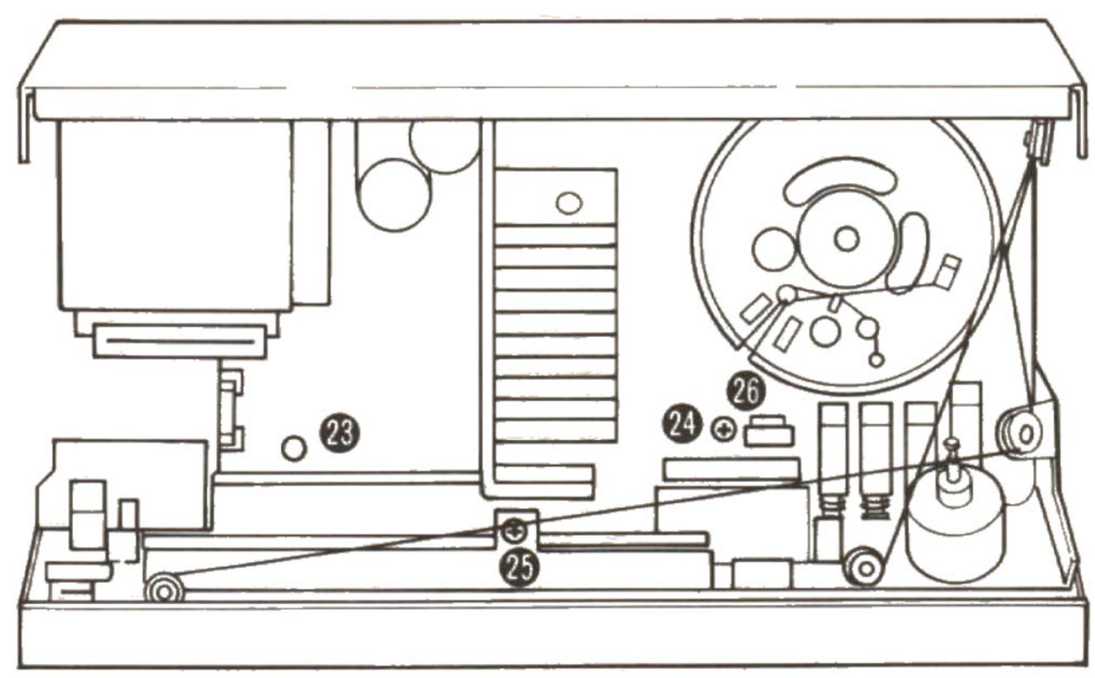

Fig. 6

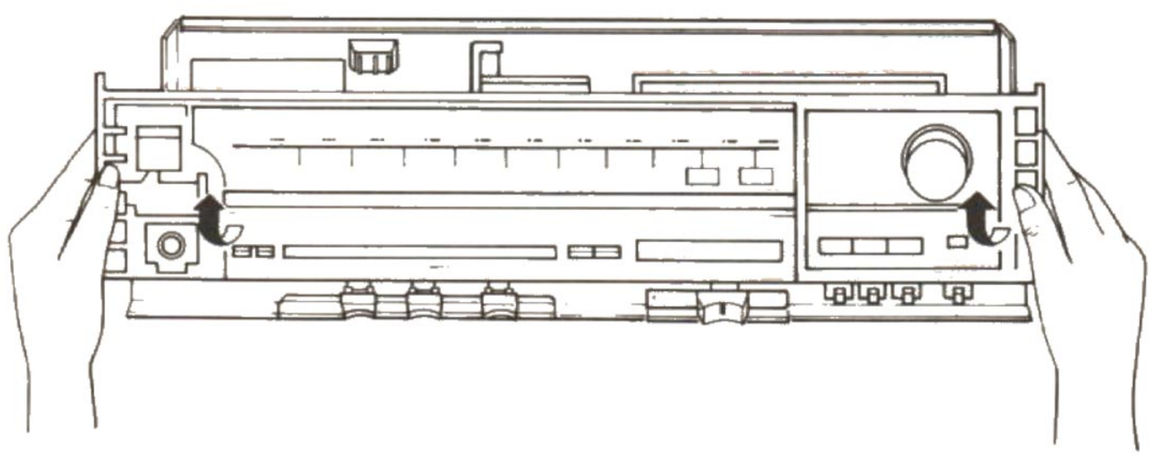

Fig. 7

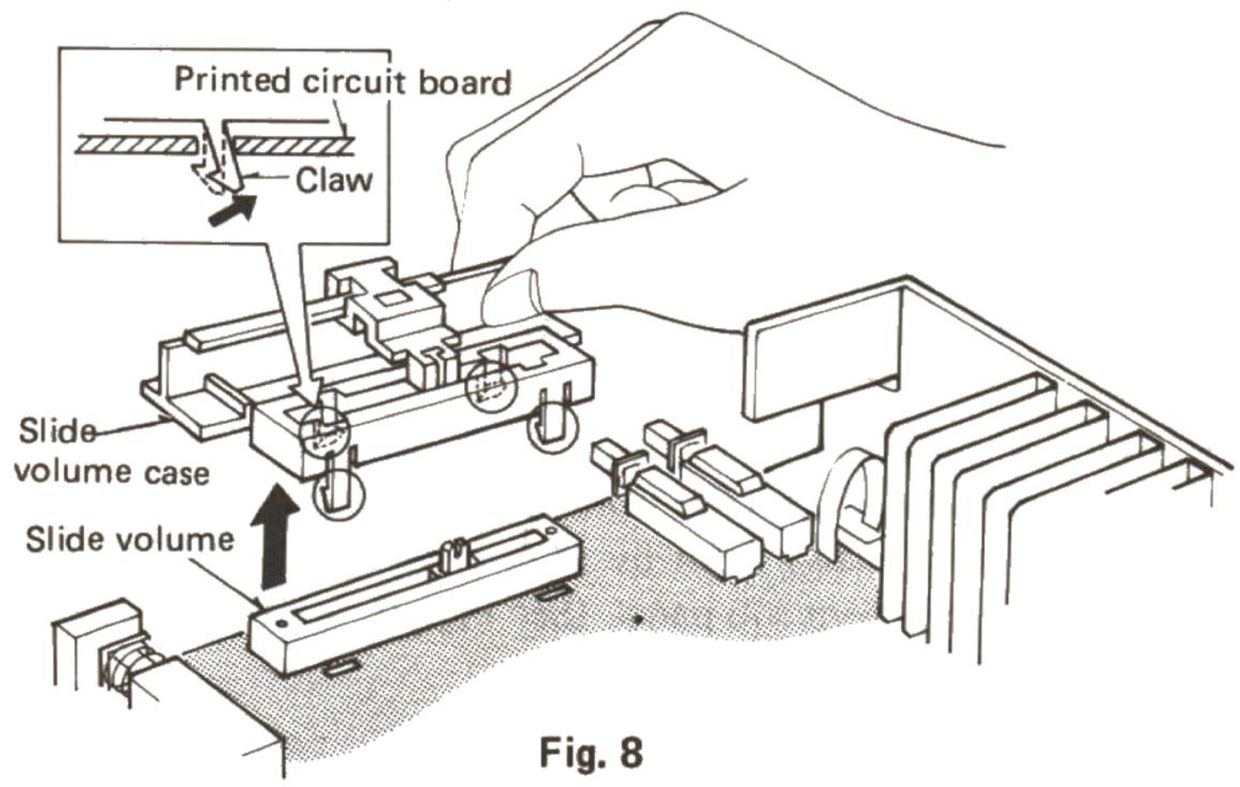

Fig. 8

DIAL CORD INSTALLATION GUIDE

- **When setting the cord, follow the procedure given below**

1. The cord should be at least 180 cm long.
2. Completely turn the tuning gang (variable capacitor) counterclockwise. (Variable capacity : max. Frequency; min.)
3. Make a knot at the cord and as shouwn in Fig. 9
4. Set the spring to the knot, and set the cord in the order of 1 – 10.

Note: At step 7, pull the cord strongly, slacken the spring up to the mark of the durm, then go to steps 9 – 10 to set the cord.

5. Fix the cord terminal with adhesive.
6. Cut off the cord about 5 mm at its either end.

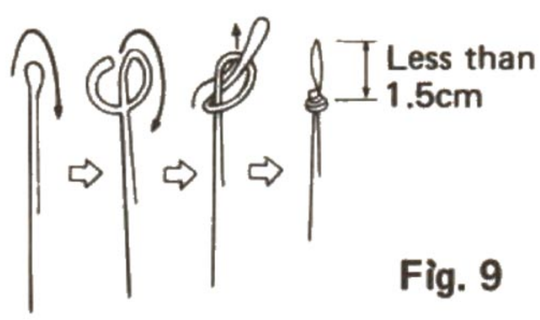

Fig. 9

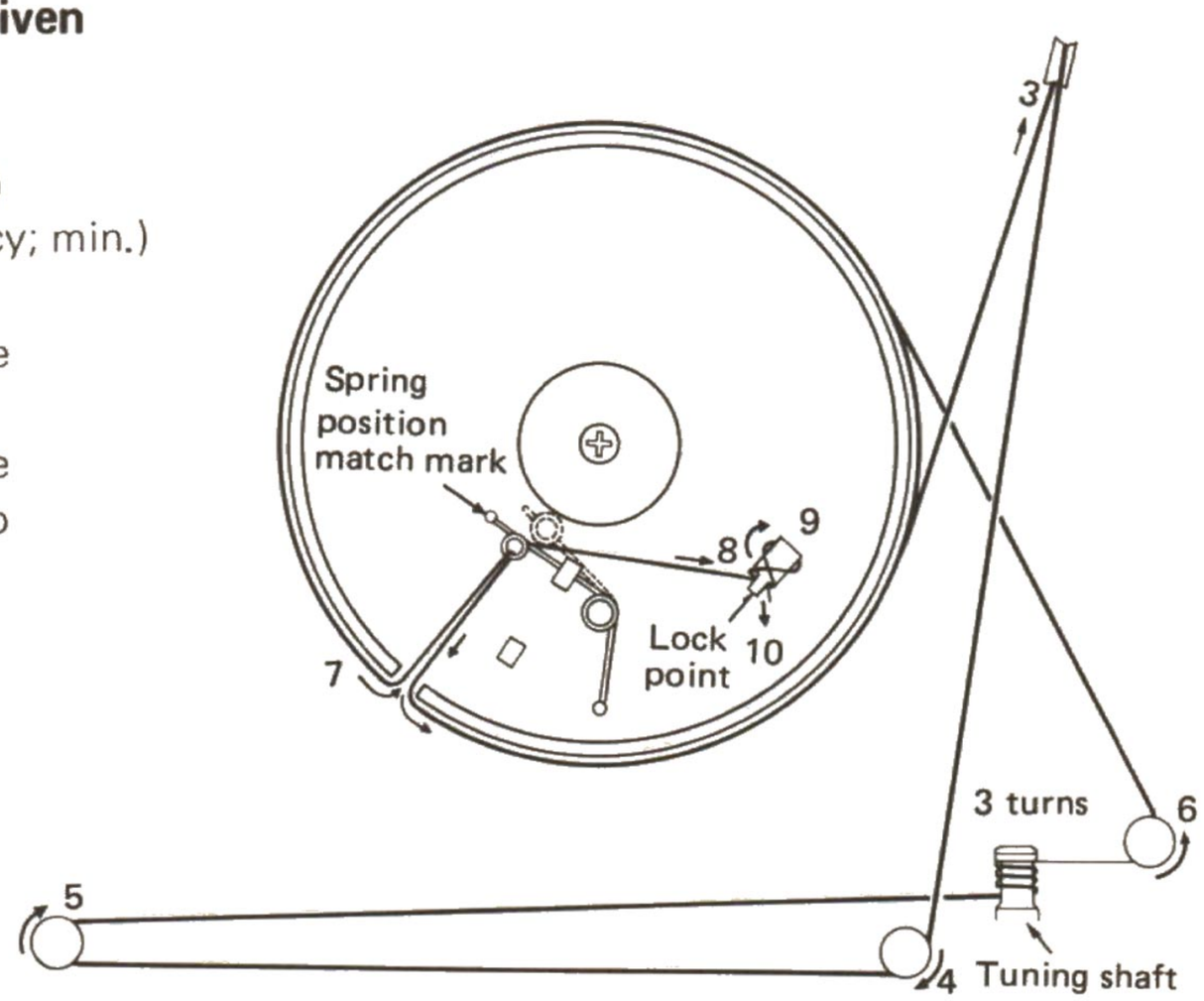

www.hifiengine.com

■ MEASUREMENTS AND ADJUSTMENTS

Note: AM OSC Coil (L201) and AM IFT (T202) have been already adjusted, and require no adjustment.

AM ADJUSTMENT

*** Setting and Equipment used**

1. AC electronic voltmeters (VTVM)
2. AM signal generator (AM-SG)
3. Set Band selector to "AM" position.
4. Maintain line voltage at 120 volts.
5. Output of signal generator should be no higher than necessary to obtain an output reading.
6. Use a non-metal screwdriver for the adjustment.

Step No.	AM SIGNAL GENERATOR CONNECTION	AM SIGNAL GENERATOR FREQUENCY	DIAL SETTING	PREPARATIONS	PARTS ADJUSTED	ADJUSTING PROCEDURE
	AM-RF ADJUSTMENT					
1	Connect AM-SG to AM antenna terminal through 200pF capacitor referring to Fig. 10. (Weak input)	600kHz (30% Mod. with 400Hz)	600kHz	Connect AC VTVM or scope to "speaker" terminal of the set.	L205 (ANT Coil) L206 (OSC Coil)	1. Adjust for maximum output.
2		1500kHz (30% Mod. with 400Hz)	1500kHz	Connect AC VTVM or scope to "speaker" terminal of the set.	CT204 (OSC Trimmer) CT203 (ANT Trimmer)	1. Adjust for maximum output. 2. Repeat steps (1) and (2).

FM ADJUSTMENT

*** Setting and Equipment used**

1. FM signal generator (FM-SG)
2. Oscilloscope.
3. DC electronic voltmeters (VTVM).
4. Frequency counter (19kHz and 108MHz measurable).
5. Set band selector to "FM" position.
6. FM muting/FM mode switch ... off/FM mono.
7. Other setting are the same as in AM adjustment.

*** FM signal generator (FM-SG)**

1. The standard input of the set is 60dB (1mV), 400Hz 100% modulation (Because of attenuation, using coaxial cables, SG output must be 6dB plus. That is, when input is 60dB, SG output is to be 66dB.)

Step No.	FM SIGNAL GENERATOR CONNECTION	FM SIGNAL GENERATOR FREQUENCY	DIAL SETTING	PREPARATIONS	PARTS ADJUSTED	ADJUSTING PROCEDURE
	FM IF ADJUSTMENT					
3	Connect FM-SG to FM antenna terminal referring to Fig. 11 (Apply 60dB to antenna terminal)	100MHz (100% Mod. with 400Hz)	100MHz	Connect DC VTVM to between TP201 and TP202 through choke coil (Refer to Fig. 11.)	T201 (Discri. IFT)	1. Adjust T201 core so that voltage measured in signal mode is 0mV in 150mV range.
	FM-RF ADJUSTMENT * Connect TP201 and TP202					
4	Connect FM-SG to FM antenna terminal referring to Fig. 11 (Apply 60dB to antenna terminal)	90MHz (100% Mod. with 400Hz) weak input	90 MHz	Connect scope to "speaker" terminal	L204 (OSC Coil) L202 (RF DET Coil)	• Add weak input so that noise is included in the output waveform. • Make the adjustment so that the output wave form is vertically symmetrical. (Fig. 13) • Repeat the steps (4) and (5) until the frequency correctly matches the dial scale.
5		106MHz (100% Mod. with 400Hz) weak input.	106 MHz	Connect scope to "speaker" terminal	CT202 (OSC Trimmer)	

FM MPX V.C.O. ADJUSTMENT

Step No.	USING A FREQUENCY COUNTER	USING ALTERNATE SYSTEM
6	1. 100MHz 60dB Non-modulated mono signal applied to set. 2. FM muting/FM mode switch to "on/FM auto". 3. Connect frequency counter to TP301 through resistor (100kΩ). 4. Adjust VR301 to 19kHz ± 30 Hz. (Fig. 12)	1. Apply stereo signal from generator or stereo station to tuner. 2. Adjust **VR301** until stereo indicator lights up. Cement arm of **VR301** as shown in Fig. 14.

- **Check points**

Overload detection circuit

① Connect 4Ω load to speaker terminal.

② Add 1kHz signal from the audio frequency oscillator to the set and adjust the sound volume control knob so that the output voltage is 5 volts.

③ Connect 3.3Ω (2W) load to speaker terminal.

④ Make sure that relay in the set is OFF and no output is delivered.

*** If protection circuit turns OFF due to overload, the circuit and load will not restore their normal conditions unless power supply is once turned OFF and again turned ON.**

www.hifiengine.com

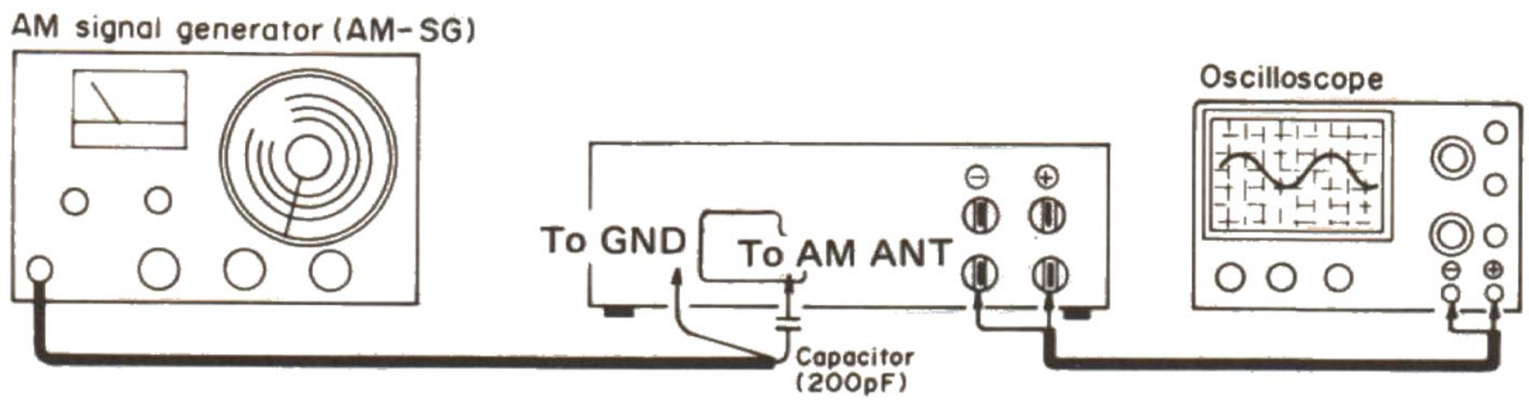

Fig. 10

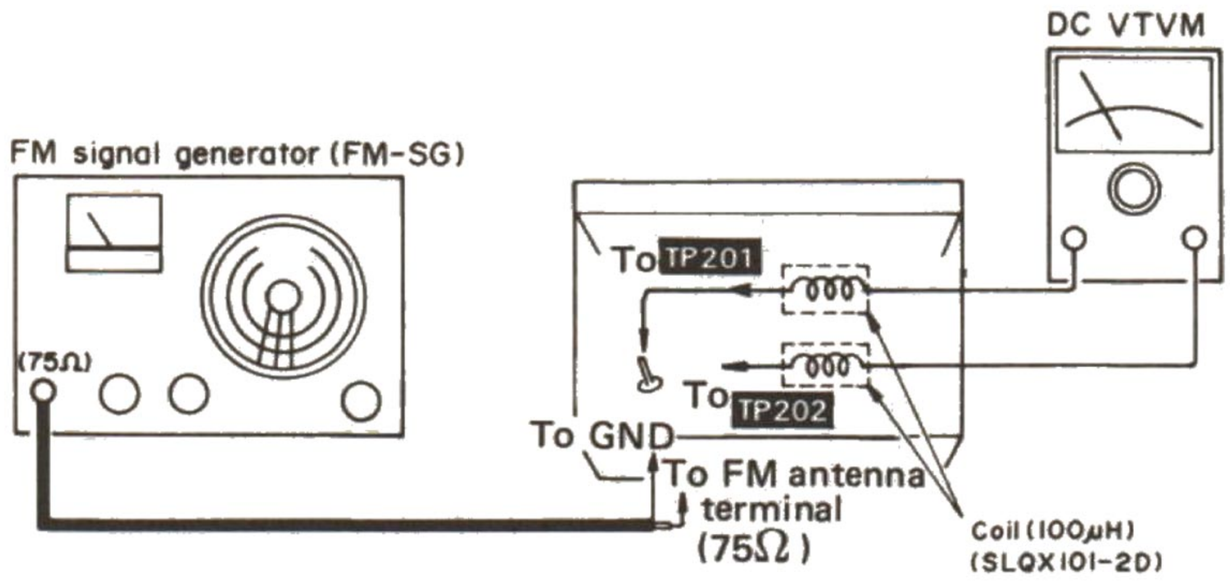

Fig. 11

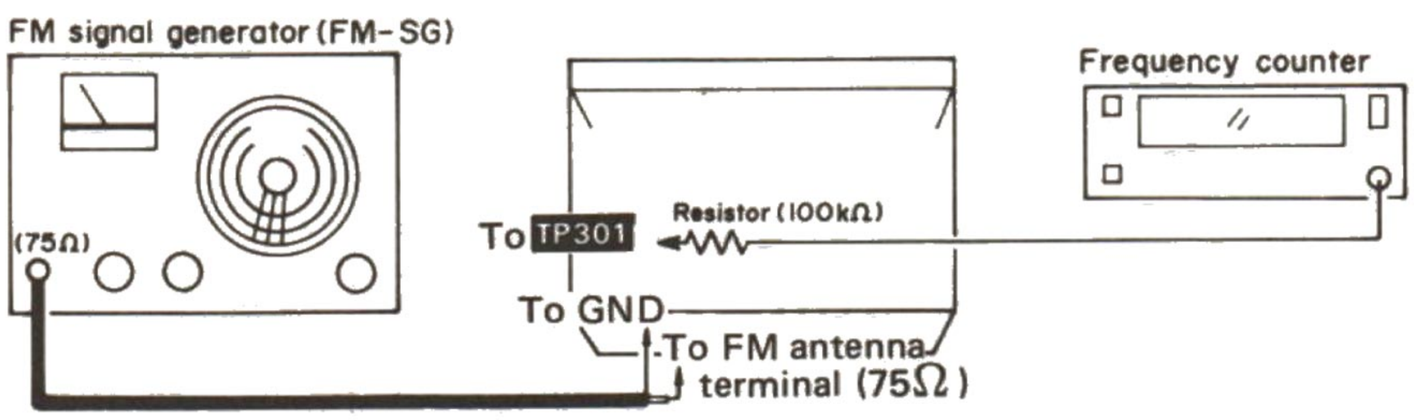

Fig. 12

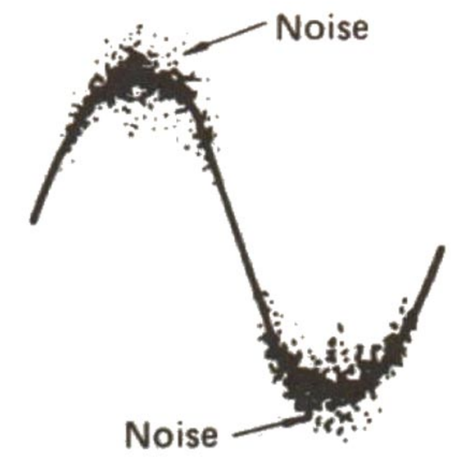

AF output wave form

Fig. 13

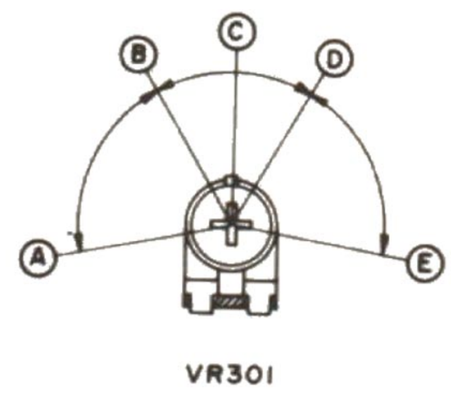

A–B, D–E Stereo OFF Position.
B–D Stereo ON Position. (indicator Lighting)
C Adjust Point of Pilot Circuit.

Fig. 14

• Adjustment points

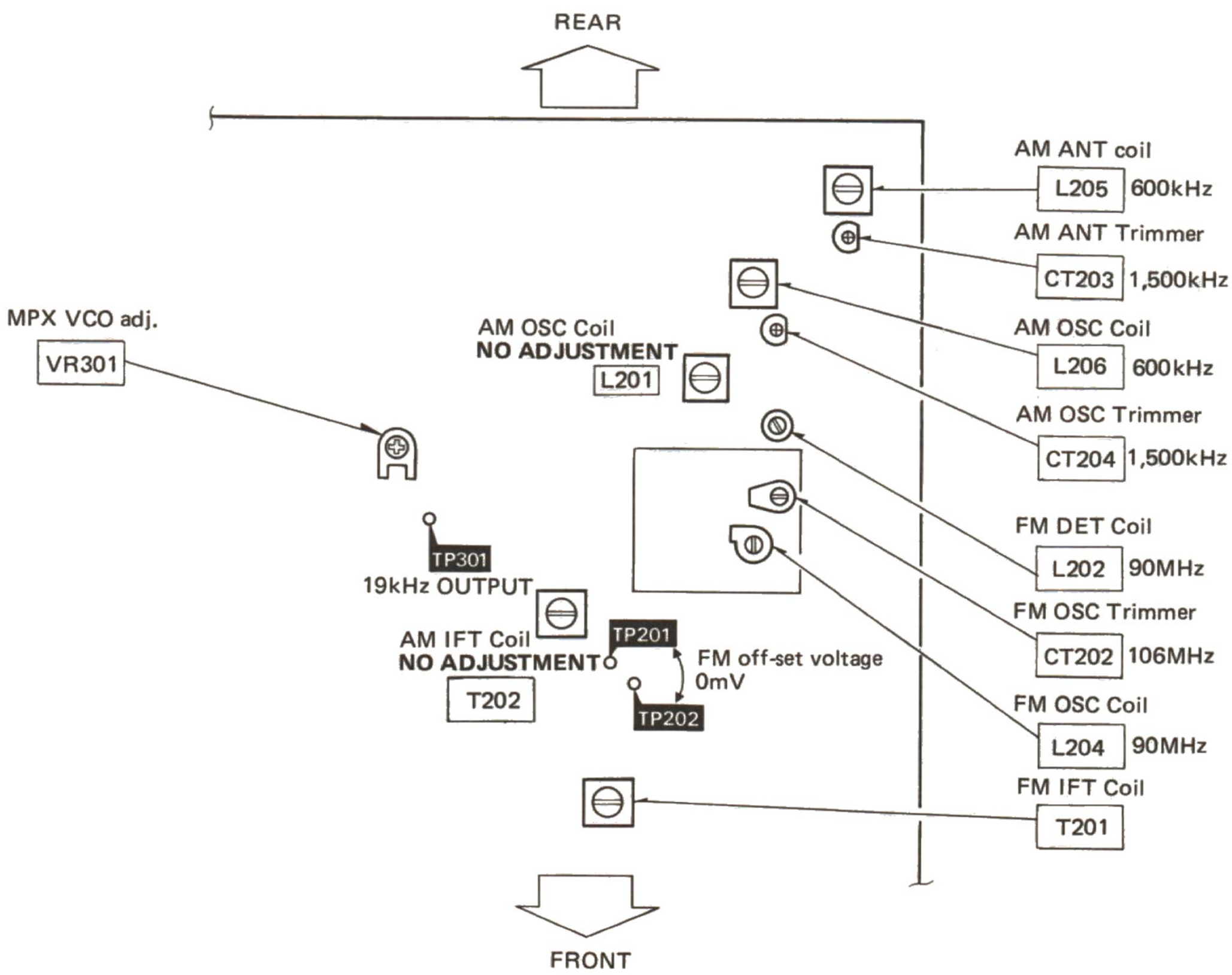

www.hifiengine.com

■ CIRCUIT BOARDS AND WIRING CONNECTION DIAGRAM

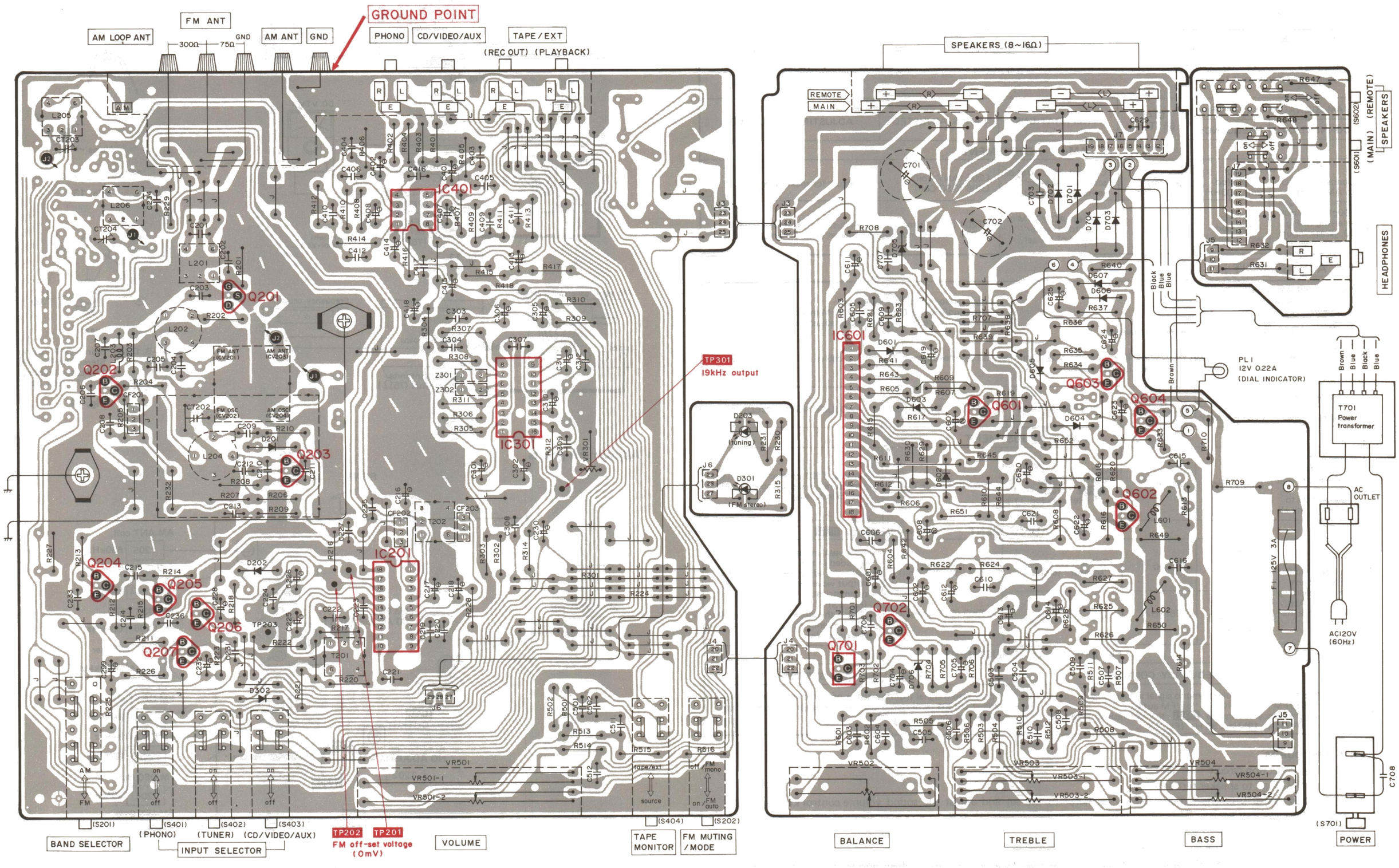

■ RESISTORS & CAPACITORS

Notes:
1. Part numbers are indicated on most mechanical parts. Please use this part number for parts orders.
2. Important safety notice: Components identified by ⚠ mark have special characteristics important for safety. When replacing any of these components use only manufacturer's specified parts.
3. The "Ⓢ" mark is service standard parts and may differ from production parts.
4. The unit of resistance is Ω. (ohm) K=1000Ω, M=1000kΩ.
5. The unit of capacitance is μF. (microfarad) P=10^{-6}μF.

Numbering System of Resistor

Example

ERD	25	F	J	101
Type	Wattage	Shape	Tolerance	Value

Resistor Type	Wattage	Tolerance
ERD : Carbon ERX : Metal Film ERG : Metal Oxide ERC : Solide	25 : 1/4W S1 : 1/2W 1 : 1W 2 : 2W 12 : 1/2W	J : ±5% K : ±10%

Numbering System of Capacitor

Example

ECKD	1H	102	M	D
Type	Voltage	Value	Tolerance	Peculiarity

ECEA	50	M	R47	R
Type	Voltage	Peculiarity use	Value	Special use

Capacitor Type	Voltage: ECEA Type	Voltage: Others	Tolerance
ECEA : Electrolytic ECCD : Ceramic ECKD : Ceramic ECQM : Polyester ECQP : Polypropylene ECET : Electrolytic	1A : 10V 1C : 16V 1E : 25V 45 : 45V 1H : 50V 50 : 50V 25 : 25V 1J : 63V	1H : 50V DC KC : 400V AC 2H : 500V DC	C : ±0.25pF J : ±5% K : ±10% Z : +80%, −20% P : +100%, −0%

Ref. No.		Part No.	Value
RESISTORS			
R201	Ⓢ	ERD25FJ102	1K
R202	Ⓢ	ERD25FJ220	22
R203	Ⓢ	ERD25FJ221	220
R204	Ⓢ	ERD25TJ474	470K
R205	Ⓢ	ERD25FJ471	470
R206	Ⓢ	ERD25TJ123	12K
R207	Ⓢ	ERD25FJ822	8.2K
R208	Ⓢ	ERD25FJ102	1K
R209	Ⓢ	ERD25FJ562	5.6K
R210	Ⓢ	ERD25TJ224	220K
R211	Ⓢ	ERD25FJ472	4.7K
R212	Ⓢ	ERD25FJ152	1.5K
R213	Ⓢ	ERD25TJ564	560K
R214	Ⓢ	ERD25TJ684	680K
R215	Ⓢ	ERD25FJ471	470
R216	Ⓢ	ERD25TJ824	820K
R217	Ⓢ	ERD25FJ152	1.5K
R218	Ⓢ	ERD25FJ122	1.2K
R220	Ⓢ	ERD25FJ102	1K
R221	Ⓢ	ERD25FJ331	330
R222	Ⓢ	ERD25FJ103	10K
R223	Ⓢ	ERD25FJ562	5.6K
R224	Ⓢ	ERD25FJ103	10K
R225,226	Ⓢ	ERD25FJ472	4.7K
R227	Ⓢ	ERD25TJ154	150K
R228	Ⓢ	ERD25FJ122	1.2K
R229	Ⓢ	ERD25FJ821	820
R230	Ⓢ	ERD25FJ471	470
R231	Ⓢ	ERD25FJ102	1K
R232	Ⓢ	ERD25FJ151	150
R301,302	Ⓢ	ERD25FJ103	10K
R303	Ⓢ	ERD25TJ104	100K
R304	Ⓢ	ERD25FJ470	47
R305,306	Ⓢ	ERD25TJ223	22K
R307,308	Ⓢ	ERD25FJ332	3.3K
R309,310	Ⓢ	ERD25TJ333	33K
R311	Ⓢ	ERD25TJ274	270K
R312	Ⓢ	ERD25TJ153	15K
R314	Ⓢ	ERD25FJ561	560
R315	Ⓢ	ERD25FJ102	1K
R401,402	Ⓢ	ERD25FJ391	390
R403,404	Ⓢ	ERD25TJ224	220K
R405,406	Ⓢ	ERD25TJ563	56K
R407,408	Ⓢ	ERD25FJ271	270
R409,410	Ⓢ	ERD25FJ680	68
R411,412	Ⓢ	ERD25TJ184	180K
R413,414	Ⓢ	ERD25TJ123	12K
R415,416	Ⓢ	ERD25TJ563	56K

Ref. No.		Part No.	Value
RESISTORS			
R417,418	Ⓢ	ERD25FJ102	1K
R501,502	Ⓢ	ERD25FJ222	2.2K
R503,504	Ⓢ	ERD25FJ222	2.2K
R505,506	Ⓢ	ERD25FJ561	560
R507,508	Ⓢ	ERD25TJ183	18K
R509,510	Ⓢ	ERD25FJ222	2.2K
R511,512	Ⓢ	ERD25TJ124	120K
R513,514	Ⓢ	ERD25TJ823	82K
R515,516	Ⓢ	ERD25TJ473	47K
R601,602	Ⓢ	ERD25FJ102	1K
R603,604	Ⓢ	ERD25TJ393	39K
R605,606	Ⓢ	ERD25FJ222	2.2K
R607,608	Ⓢ ⚠	ERD25FJ272	2.7K
R609	Ⓢ ⚠	ERG1ANJ152	1.5K
R610	⚠	ERDS1FJ101	100
R611,612	Ⓢ	ERX2ANJR22	0.22
R613,614	⚠	ERDS1FJ100	10
R615,616	Ⓢ	ERD25FJ222	2.2K
R617,618	Ⓢ	ERD25TJ153	15K
R619,620	Ⓢ	ERD25TJ123	12K
R621,622	Ⓢ	ERD25TJ123	12K
R623,624	Ⓢ	ERD25TJ473	47K
R625,626	Ⓢ ⚠	ERD25TJ153	15K
R627,628	Ⓢ	ERD25FJ102	1K
R629	Ⓢ	ERD25FJ102	1K
R630	Ⓢ ⚠	ERD25TJ223	22K
R631,632	Ⓢ	ERG1ANJ331	330
R633	Ⓢ	ERD25FJ562	5.6K
R634	Ⓢ	ERD25TJ123	12K
R635	Ⓢ	ERD25TJ473	47K
R636	Ⓢ	ERD25TJ154	150K
R637	Ⓢ	ERD25TJ104	100K
R638	Ⓢ	ERG1ANJ152	1.5K
R639	Ⓢ	ERD25TJ184	180K
R640,641	Ⓢ ⚠	ERD25FJ470	47
R642	Ⓢ ⚠	ERD25FJ1R0	1.0
R643	Ⓢ ⚠	ERD25FJ470	47
R644	Ⓢ ⚠	ERD25FJ470	47
R645	Ⓢ ⚠	ERD25FJ470	47
R647,648	Ⓢ	ERD25TJ104	100K
R649,650	⚠	ERDS1FJ100	10
R651 (M)only	⚠	ERD25FJ1R0	1.0
R652 (M)only	⚠	ERDS1FJ101	100
R701	⚠	ERDS1FJ270	27
R702	Ⓢ	ERD25FJ821	820
R703	⚠	ERDS1FJ152	1.5K

Ref. No.		Part No.	Value
RESISTORS			
R704	Ⓢ	ERD25FJ681	680
R705	Ⓢ	ERD25FJ272	2.7K
R706	Ⓢ	ERD25FJ392	3.9K
R707	⚠	ERDS1FJ152	1.5K
R708	Ⓢ	ERD25FJ221	220
R709	Ⓢ ⚠	ERC12ZGK335	3.3M
R710(M)only		ERD25FAJ2R2	2.2
CAPACITORS			
C201	Ⓢ	ECCD1H120KC	12P
C202	Ⓢ	ECCD1H180KC	18P
C203	Ⓢ	ECKD1H103ZF	0.01
C204	Ⓢ	ECCD1H220KC	22P
C205	Ⓢ	ECCD1H030CC	3P
C206	Ⓢ	ECCD1H070CC	7P
C207	Ⓢ	ECCD1H181K	180P
C208	Ⓢ	ECKD1H103ZF	0.01
C209	Ⓢ	ECCD1H080CC	8P
C210	Ⓢ	ECCD1H390KC	39P
C211	Ⓢ	ECCD1H100KC	10P
C212	Ⓢ	ECKD1H102ZF	0.001
C213,214	Ⓢ	ECKD1H103ZF	0.01
C215	Ⓢ	ECCD1H151K	150P
C216	Ⓢ	ECEA1HS100	10
C217	Ⓢ	ECEA1AS101	100
C218	Ⓢ	ECEA25Z4R7	4.7
C219,220	Ⓢ	ECKD1H223ZF	0.022
C221		ECQM1H333KV	0.033
C222	Ⓢ	ECCD1H101K	100P
C223,224	Ⓢ	ECKD1H223ZF	0.022
C225	Ⓢ	ECEA1AS470	47
C226	Ⓢ	ECEA50Z1	1
C227	Ⓢ	ECKD1H223ZF	0.022
C228	Ⓢ	ECEA1HS100	10
C230	Ⓢ	ECEA1HS100	10
C231		ECQM1H183KV	0.018
C232	Ⓢ	ECEA50Z2R2	2.2
C233	Ⓢ	ECCD1H270KC	27P
C234	Ⓢ	ECKD1H223ZF	0.022
C235	Ⓢ	ECCD1H330KC	33P
C236	Ⓢ	ECKD1H223ZF	0.022
C299	Ⓢ	ECEA1HS100	10
C301	Ⓢ	ECEA50Z1	1
C302	Ⓢ	ECEA1ES101	100
C303,304		ECQM1H223KV	0.022
C305,306	Ⓢ	ECEA25Z4R7	4.7
C307		ECQM1H473KV	0.047
C308	Ⓢ	ECKD1H103ZF	0.01

Ref. No.		Part No.	Value
CAPACITORS			
C309		ECQP1471JZ	470P
C310	Ⓢ	ECEA50ZR47	0.47
C311	Ⓢ	ECEA50Z1	1
C312	Ⓢ	ECKD1H103ZF	0.01
C401,402	Ⓢ	ECEA50Z3R3	3.3
C403,404	Ⓢ	ECCD1H101K	100P
C405,406	Ⓢ	ECKD1H471KB	470P
C407,408	Ⓢ	ECEA1CS330	33
C409,410		ECQM1H223KV	0.022
C411,412		ECQM1H682KV	0.0068
C413,414	Ⓢ	ECEA50Z1	1
C415	Ⓢ	ECEA1CS330	33
C416	Ⓢ	ECKD1H473ZF	0.047
C417	Ⓢ	ECKD1H103ZF	0.01
C418	Ⓢ	ECEA1CS330	33
C501,502	Ⓢ	ECKD1H331KB	330P
C503,504		ECQM1H222KV	0.0022
C505,506		ECQM1H223KV	0.022
C507,508		ECQM1H183KV	0.018
C509,510		ECQM1H104KV	0.1
C511,512		ECQM1H333KV	0.033
C601,602	Ⓢ	ECEA50Z2R2	2.2
C603,604	Ⓢ	ECCD1H101K	100P
C605,606	Ⓢ	ECKD1H221KB	220P
C607,608	Ⓢ	ECEA1HN3R3S	3.3
C609,610	Ⓢ	ECCD1H050CC	5P
C611,612	Ⓢ	ECEA1AS470	47
C613,614	Ⓢ	ECEA1HS100	10
C615, 616 (M)	Ⓢ	ECKD1H473ZF	0.047
C615, 616 (MC)		ECQM1H104KV	0.1
C619	Ⓢ	ECEA1AS470	47
C620	Ⓢ	ECEA1HS101	100
C621	Ⓢ	ECKD1H103ZF	0.01
C622	Ⓢ	ECEA1JS330	33
C623	Ⓢ	ECEA1HS100	10
C624,625	Ⓢ	ECEA1JS330	33
C627,628 (MC)only		ECQM1H104KV	0.1
C701,702	⚠	ECETS45V472U	4700
C703	Ⓢ ⚠	ECKD2H103PE	0.01
C704	Ⓢ	ECEA1ES101	100
C705	Ⓢ	ECEA1HS100	10
C706,707	Ⓢ	ECKD1H103ZF	0.01
C708	⚠	ECKDKC103PF2	0.01

www.hifiengine.com

BLOCK DIAGRAM

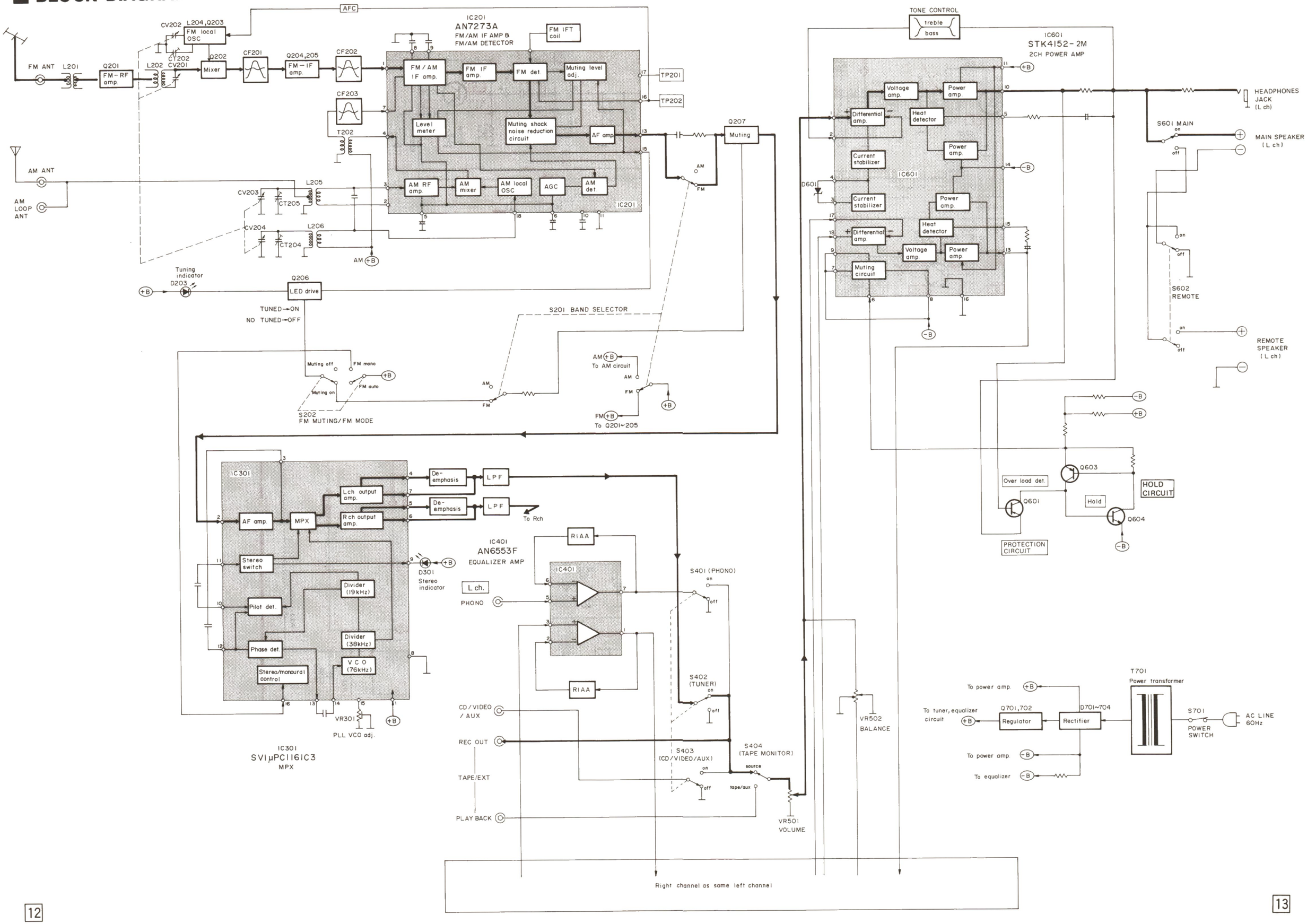

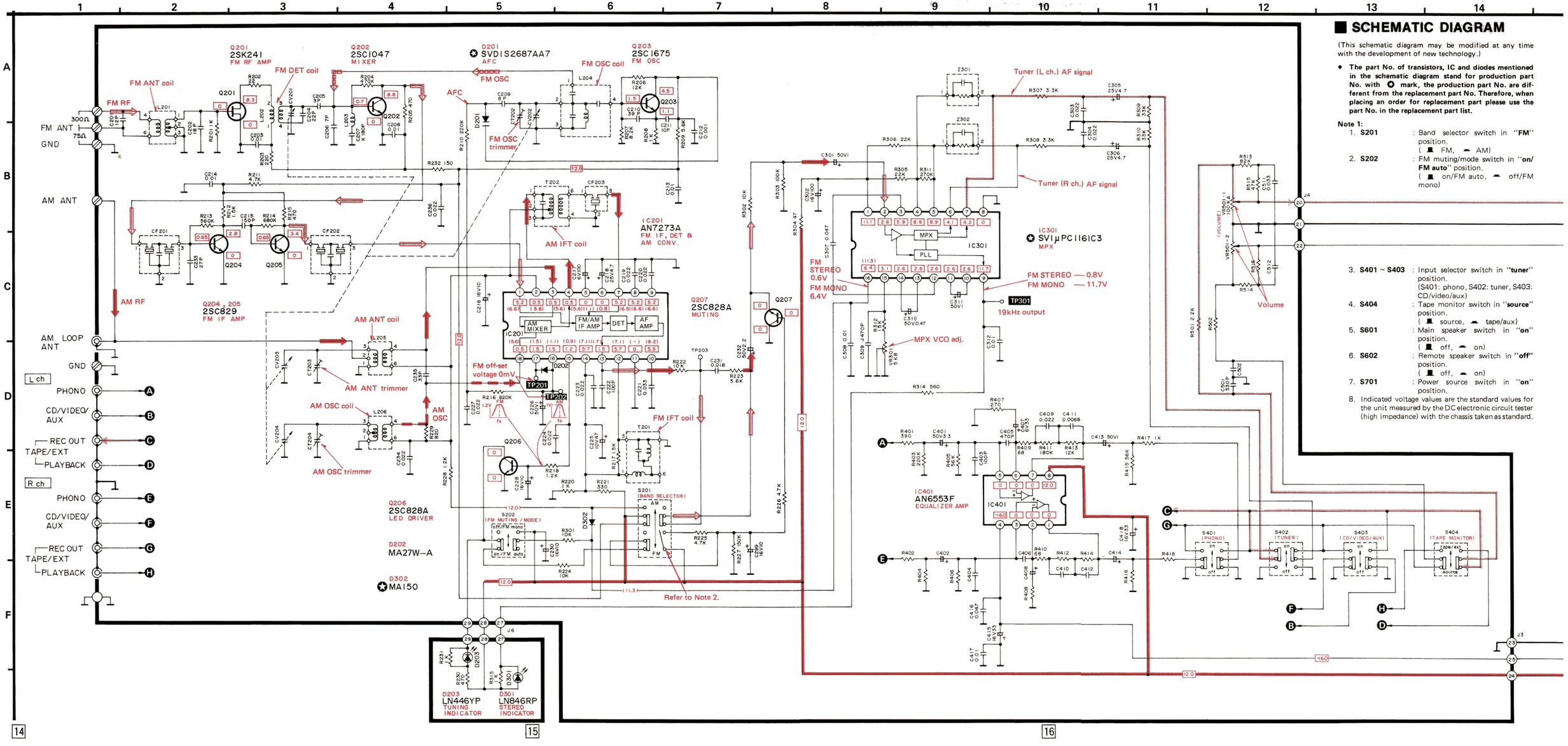

■ SCHEMATIC DIAGRAM

(This schematic diagram may be modified at any time with the development of new technology.)

- **The part No. of transistors, IC and diodes mentioned in the schematic diagram stand for production part No. with ✪ mark, the production part No. are different from the replacement part No. Therefore, when placing an order for replacement part please use the part No. in the replacement part list.**

Note 1:

1. **S201** : Band selector switch in "**FM**" position. (■ FM, ▲ AM)
2. **S202** : FM muting/mode switch in "**on/FM auto**" position. (■ on/FM auto, ▲ off/FM mono)
3. **S401 ~ S403** : Input selector switch in "**tuner**" position. (S401: phono, S402: tuner, S403: CD/video/aux)
4. **S404** : Tape monitor switch in "**source**" position. (■ source, ▲ tape/aux)
5. **S601** : Main speaker switch in "**on**" position. (■ off, ▲ on)
6. **S602** : Remote speaker switch in "**off**" position. (■ off, ▲ on)
7. **S701** : Power source switch in "**on**" position.
8. Indicated voltage values are the standard values for the unit measured by the DC electronic circuit tester (high impedance) with the chassis taken as standard.

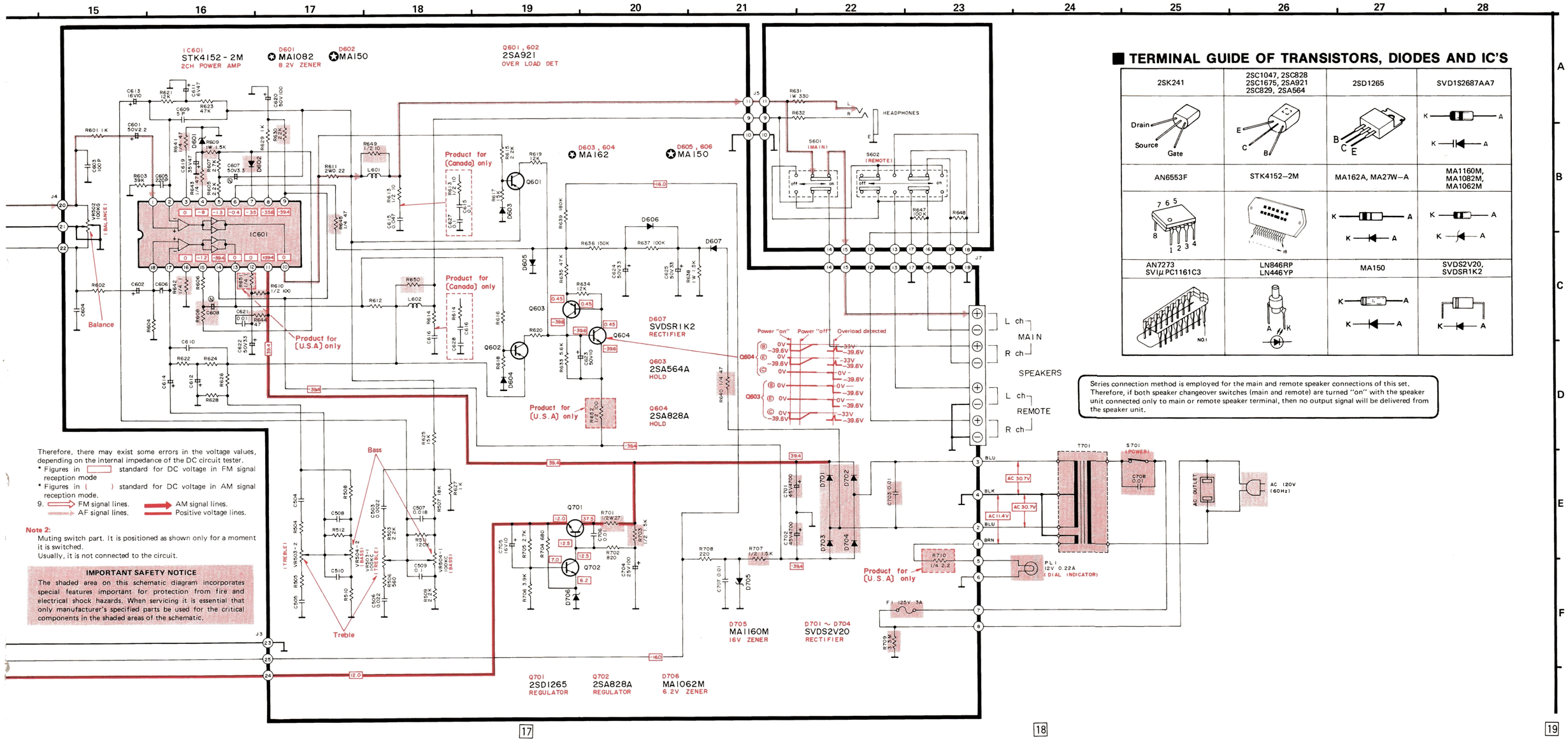
IC601
STK4152-2M
2CH POWER AMP
D601
MA1082
8.2V ZENER
D602
MA150
Q601, 602
2SA921
OVER LOAD DET
D603, 604
MA162
D605, 606
MA150
Product for (Canada) only
Product for (U.S.A) only
Balance
Bass
Treble
D607
SVDSR1K2
RECTIFIER
Q603
2SA564A
HOLD
Q604
2SA828A
HOLD
Q701
2SD1265
REGULATOR
Q702
2SA828A
REGULATOR
D706
MA1062M
6.2V ZENER
D705
MA1160M
16V ZENER
D701 ~ D704
SVDS2V20
RECTIFIER
HEADPHONES
S601 (MAIN)
S602 (REMOTE)
Power "on"
Power "off"
Overload detected
L ch
MAIN
R ch
SPEAKERS
L ch
REMOTE
R ch
T701
S701 (POWER)
AC OUTLET
AC 120V (60Hz)
P.L.1 12V 0.22A (DIAL INDICATOR)
F.1 125V 3A
Therefore, there may exist some errors in the voltage values, depending on the internal impedance of the DC circuit tester.
* Figures in ▭ standard for DC voltage in FM signal reception mode
* Figures in ( ) standard for DC voltage in AM signal reception mode.
9. FM signal lines. AM signal lines.
AF signal lines. Positive voltage lines.
Note 2:
Muting switch part. It is positioned as shown only for a moment it is switched.
Usually, it is not connected to the circuit.
IMPORTANT SAFETY NOTICE
The shaded area on this schematic diagram incorporates special features important for protection from fire and electrical shock hazards. When servicing it is essential that only manufacturer's specified parts be used for the critical components in the shaded areas of the schematic.
TERMINAL GUIDE OF TRANSISTORS, DIODES AND IC'S
2SK241
Drain
Source
Gate
2SC1047, 2SC828
2SC1675, 2SA921
2SC829, 2SA564
2SD1265
SVD1S2687AA7
AN6553F
STK4152-2M
MA162A, MA27W-A
MA1160M, MA1082M, MA1062M
AN7273
SVIμPC1161C3
LN846RP
LN446YP
MA150
SVDS2V20, SVDSR1K2
Series connection method is employed for the main and remote speaker connections of this set. Therefore, if both speaker changeover switches (main and remote) are turned "on" with the speaker unit connected only to main or remote speaker terminal, then no output signal will be delivered from the speaker unit.

■ REPLACEMENT PARTS LIST

Notes:
1. Part numbers are indicated on most mechanical parts. Please use this part numbe for parts orders.
2. Important safety notice:
   Components identified by ⚠ mark have special characteristics important for safety.
   When replacing any of these components use only manufacturer's specjfied parts.
3. The "Ⓢ" mark is service standard parts and many differ from production parts.
4. The parenthesized numbers in the column of description stand for the quantity per set.
5. Bracketed indications in Ref. No. columns specify the areas. Parts without these indications can be used for all areas.

Areas

* [M] is available in the U.S.A.
* [MC] is available in Canada.

Ref. No.	Part No.	Part Name & Description
INTEGRATED CIRCUITS		
IC201	AN7273A	FM IF Det. & AM Convertor
IC301	SVIUPC1161C3	MPX
IC401	AN6553F	Equalizer
IC601 ⚠	STK4152−2M	Power
TRANSISTORS		
Q201	2SK241−GR	FM-RF Amp.
Q202 Ⓢ	2SC1047−D	Mixer
Q203 Ⓢ	2SC1675−L	FM OSC
Q204,205 Ⓢ	2SC829−C	FM-IF Amp.
Q206,207, 604,702 Ⓢ	2SC828AS	LED Drive, Muting, Regulator, Hold
Q601,602	2SA921−R	Over Load Det.
Q603 Ⓢ	2SA564AR	Hold
Q701	2SD1265−O	Regulator
DIODES		
D201 Ⓢ	1S2687AA	FM AFC
D202	MA27W−A	
D203	LN446YP	L. E. D.(Tuning)
D301	LN846RP	L. E. D.(Stereo)
D302, 602~606 Ⓢ	MA162A	Switching
D601 Ⓢ	SVDRD8.2EB	Zener, 8.2V
D607 Ⓢ ⚠	SVDSR1K2	Rectifier
D701~704 ⚠	SVDS2V20	Rectifier
D705	MA1160M	Zener, 16V
D706	MA1062M	Zener, 6.2V
COILS		
L201	SLA4N39	FM Antenna
L202	SLD4P71−P	FM Detector
L203	SLQZ12G1−D	Choke
L204	SL04P121−P	FM Oscillator
L205	SLA2C9−P	AM Antenna
L206	SL02C33−P	AM Oscillator
L601,602	SLQY07G−30	Choke
TRANSFORMERS		
T201	SLI4C539−P	FM IFT
T202	SLI2C139−M	AM IFT
T701 ⚠	SLT5M373	Power Source
CERAMIC FILTERS		
CF201,202	SVFE107MS2−A	FM, 10.7MHz (Red)
	SVFE107MS2−B	FM, 10.675MHz (Blue)
	SVFE107MS2−C	FM, 10.725MHz (Orange)
	SVFE107MS2−D	FM, 10.650MHz (Black)
	SVFE107MS2−E	FM, 10.750MHz (White)
(Use pair ranks as same as CF201 and CF202)		
CF203	SVFSFU450B3	AM, 450KHz
VARIABLE RESISTORS		
VR301	EVN75AA00B53	VCO Adjustment, 5kΩ(B)
VR501	EWE00605A15S	Volume Control, 100kΩ(A)
VR502	EVD00305G15S	Balance Control, 100kΩ(G)
VR503,504	EWD00205C15S	Tone Control, 100kΩ(C)

Ref. No.	Part No.	Part Name & Description
VARIABLE CAPACITORS		
CT202	ECV1ZW10X32E	Trimmer, FM OSC
CT203	ECRHA007A11	Trimmer, AM Antenna
CT204	ECRHA010A11	Trimmer, AM OSC
CV201~204	SVCCB41T914	Tuning Gang
COMPONENT COMBINATIONS		
Z301,302	EXRP181K473C	180pF, 47kΩ
LAMP		
PL1 ⚠	XAMR78S250	12V,0.22A
FUSE		
F1 ⚠	XBA1F30NU14	Power Source, 125V, 3A
SWITCHES		
S201	SSH1151	Band Selector (FM/AM)
S202,403	SSH1031	Mode, Tape Monitor
S401,402,404	SSH3069	Input Selector
S601	SSH1149	Speaker(Main)
S602	SSH1073	Speaker(Remote)
S701 ⚠	SSH1071	Power Source
CABINET and CHASSIS PARTS		
1	SUS305	Bracket (1)
2	SGWA120−SM	Front Panel, Ass'y (1)
3	SGU333−13	Dial Scale (1)
4	SBN1091	Knob, Tuning (1)
5	SGX7657	Front Sub Panel (1)
6	SBD69−2T	Knob, Tone Selector (3)
7	SBC627	Button, Power Switch (1)
8	SHS1068−1	Spacer, Button (1)
9	SUS257	Spring, Button (8)
10	SBC583−1T	Button, Input Selector (3)
11	SBC483−7T	Button, Band Selector (1)
12	SUR152M	Bracket, Tuning Shaft (1)
13	SHR5253	Spacer, Drum (1)
14	SDD105	Drum, Dial (1)
15	SUS295−1	Spring, Dial Drum (1)
16	SDZ051−2	Cord (1.8m)
17	SDT8095−1	Tuning Shaft (1)
18	SDR31	Roller, Dial (4)
19	SGX7463−3	Ornament, Volume (1)
20	SHR411	Lock Pin (3)
21	SBD77T	Knob, Volume (1)
22	SBZ657−1	Slider (1)
23	SBC423T	Button (2)
24	SHR9727	Sheet (1)
25	SBC483−6T	Button, Speaker (2)
26	SUG181	Guide, Pointer (1)
27	SGX7461−3	Ornament, Tone, Balance (1)
28	SBZ663−1	Slider (3)
29	SHP59	Spacer, Pointer (1)
30	SDP1167−1	Dial Pointer (1)
31	SJJ71B	Jack, Headphone (1)
32	SUW1989	Bracket (1)
33	SKC1352S1	Cabinet (1)
34	SKUA120−SM	Bottom Board (1)

Ref. No.	Part No.	Part Name & Description
CABINET and CHASSIS PARTS		
34−1	SKL245−2	Foot (4)
35	SJF8035−8N	Terminal Board (1)
36	SJF4815−2	Terminal Board, Speaker (1)
37 [M]	SGP6130A	Rear Panel (1)
37 [MC]	SGP6130−1A	Rear Panel (1)
38 [M]	SJS9221	Socket, AC Outlet (1)
38 [MC]	SJS9223	Socket, AC Outlet (1)
39 [M]	RHR111	Bushing, AC Cord (1)
39 [MC]	SHR129	Bushing, AC Cord (1)
40 [M] Ⓢ	RJA9Y	AC Cord (1)
40 [MC]	SJA109	AC Cord (1)
41	SJT345	Holder (2)
42	SJS5327	Socket (1)
SCREWS		
N1	XTBS3+8BFZ1	Tapping with Detent, ⊕3×8 (11)
N2	XTB3+8BFYR	Tapping, ⊕3×8 (9)
N3 Ⓢ	XTN3+8B	Tapping, ⊕3×8 (1)
N4 Ⓢ	XTB3+8BFZ	Tapping, ⊕3×8 (6)
N5	XSN26+5FZ	⊕2.6×5 (1)
N6 Ⓢ	XSN3+8BVS	⊕3×8 (2)
N7 Ⓢ	XTB3+16BFN	Tapping, ⊕3×16 (2)
N8	SNE2095−4	(4)
N9 Ⓢ	XTB3+8BFN	Tapping, ⊕3×8 (2)
N10	RNW150−2	(8)
WASHERS		
N11 Ⓢ	XWD11B	External Tooted Lock, φ11 (1)
N12 Ⓢ	XWG3	Plain, φ3 (2)
N13 Ⓢ	XWA26BFZ	Spring, φ2.6 (1)
N14 Ⓢ	XWC3B	External Toothed Lock, φ3 (1)
NUT		
N15 Ⓢ	XNS11	φ11 (1)
ACCESSORIES		
A1	SSA269	Cord, FM Antenna (1)
A2	SSA902	Loop Antenna (1)
A3	SMA231	Holder (1)
A4	SMA233−1	Holder (1)
A5	XTN3+10AFZ	Screw, Loop Antenna Holder (2)
A6 [M]	SQF12046	Instruction Book (1)
A6 [MC]	SQF12047	Instruction Book (1)
PACKING PARTS		
P1	SPP699	Polyethylene Bag (1)
P2	SPS4039	Pad, Front Side (1)
P3	SPS3515−3	Pad, Left Side (1)
P4	SPS3517−2	Pad, Right Side (1)
P5 [M]	SPG4811	Carton Box (1)
P5 [MC]	SPG4812	Carton Box (1)

www.hifiengine.com

■ EXPLODED VIEW

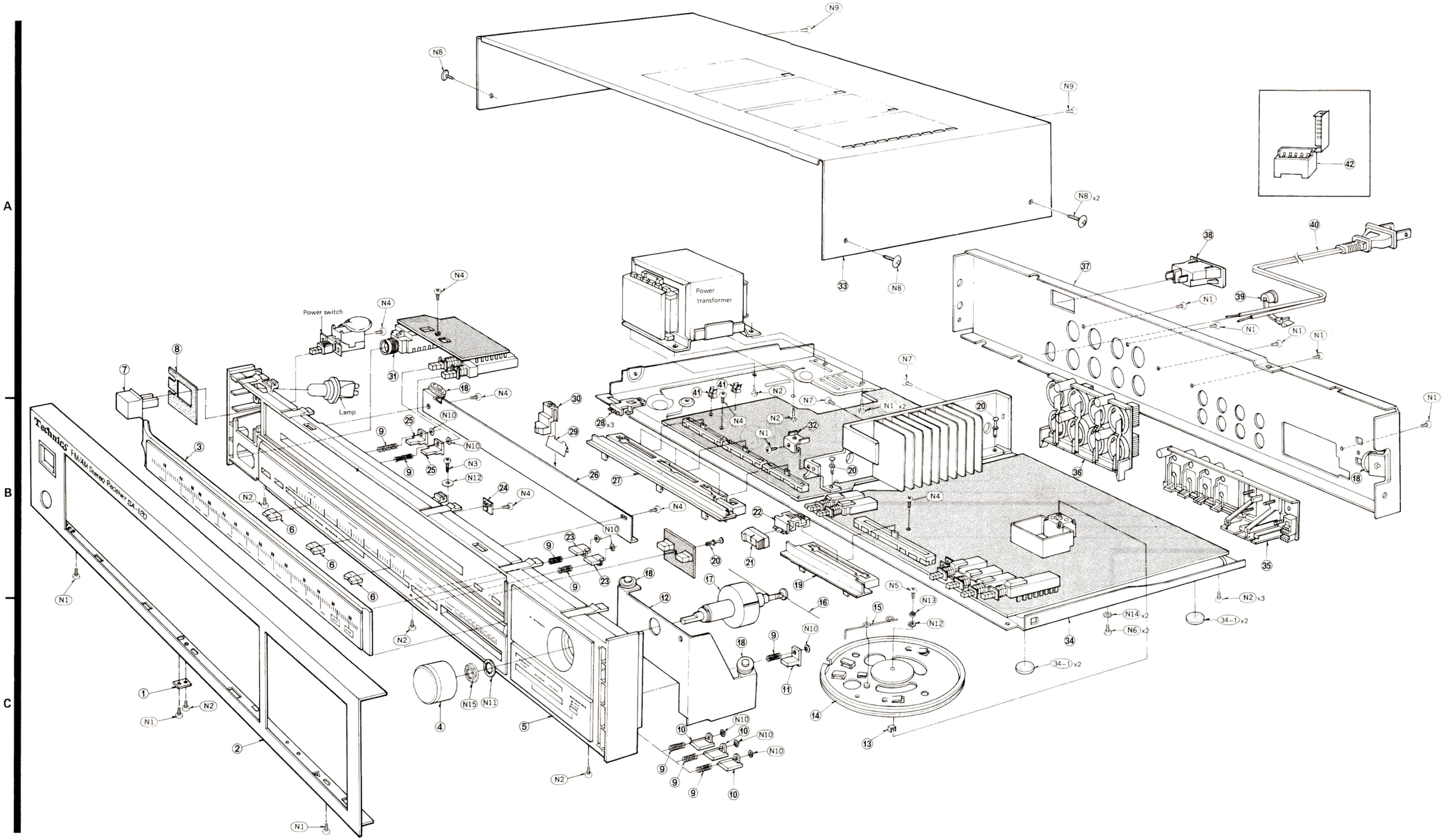

| | | |