SERVICE MANUAL

QUARTZ PLL SYNTHESIZER TUNER

SANSUI T-909/909L

(Silver & Black Model)

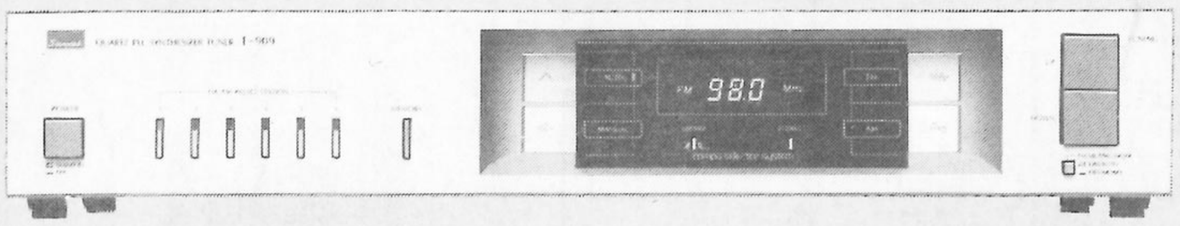

Sansui

SANSUI ELECTRIC CO., LTD.

• SPECIFICATIONS

• T-909

FM Section

Tuning range . . . . . 88 to 108 MHz
Usable sensitivity
Mono IHF . . . . . 10.8 dBf (1.9 μV: T-100)
DIN . . . . . 0.9 μV
50 dB quieting sensitivity
Mono . . . . . 16.5 dBf
Stereo . . . . . 37.0 dBf
Signal to noise ratio at 65 dBf
Mono . . . . . 75 dB
Stereo . . . . . 70 dB
Distortion at 65 dBf
Mono . . . . . less than 0.15 % at 1,000 Hz
Stereo . . . . . less than 0.2 % at 1,000 Hz
Alternate channel selectivity (at 400 kHz)
. . . . . 55 dB
Stereo separation . . . . 40 dB at 1,000 Hz
Frequency response . . 30 to 15,000 Hz
+1.0 dB, −1.5 dB
Antenna input impedance
. . . . . 300 ohms balanced
75 ohms unbalanced

AM Section

Tuning range . . . . . 530 to 1,600 kHz
Usable sensitivity (Loop antenna)
. . . . . 53 dB/m (446 μV/m)
Signal to noise ratio . . 45 dB
Image response ratio . . 40 dB at 1,000 Hz

Others

Output voltage and impedance
. . . . . 500 mV/2.2 kilohms
Power requirements . . 120/220/240 V (50/60 Hz)
For U.S.A. and Canada
. . . . . 120 V (60 Hz)
Power consumption . . 9 W
Dimensions . . . . . 430 mm (16-15/16") W
78 mm (3-1/8") H
223 mm (8-13/16") D
Weight . . . . . 2.5 kg (5.5 lbs.) net
3.3 kg (7.3 lbs.) packed

• T-909L

FM Section

Tuning range . . . . . 88 to 108 MHz
Usable sensitivity
Mono IHF . . . . . 10.8 dBf (1.9 μV: T-100)
DIN . . . . . 0.9 μV
50 dB quieting sensitivity
Mono . . . . . 16.5 dBf
Stereo . . . . . 37.0 dBf
Signal to noise ratio at 65 dBf
Mono . . . . . 75 dB
Stereo . . . . . 70 dB
Distortion at 65 dBf
Mono . . . . . less than 0.15 % at 1,000 Hz
Stereo . . . . . less than 0.2 % at 1,000 Hz
Alternate channel selectivity (at 400 kHz)
. . . . . 55 dB
Stereo separation . . . . 40 dB at 1,000 Hz
Frequency response . . 30 to 15,000 Hz
+1.0 dB, −1.5 dB
Antenna input impedance
. . . . . 300 ohms balanced
75 ohms unbalanced

AM (MW, LW) Section

Tuning range . . . . . MW: 530 to 1,600 kHz
LW: 153 to 360 kHz
Usable sensitivity . . . . MW: 53 dB/m (446 μV/m)
LW: 62 dB/m
Signal to noise ratio . . 45 dB
Image response ratio . . MW: 40 dB at 1,000 kHz
LW: 35 dB at 250 kHz

Others

Output voltage and impedance
. . . . . 500 mV/2.2 kilohms
Power requirements . . 220, 240 V (50/60 Hz)
Power consumption . . 9 W
Dimensions . . . . . 430 mm (16-15/16") W
78 mm (3-1/8") H
223 mm (8-13/16") D
Weight . . . . . 2.5 kg (5.5 lbs.) net
3.3 kg (7.3 lbs.) packed

* Design and specifications subject to changes without notice for improvements.

1. BLOCK DIAGRAM

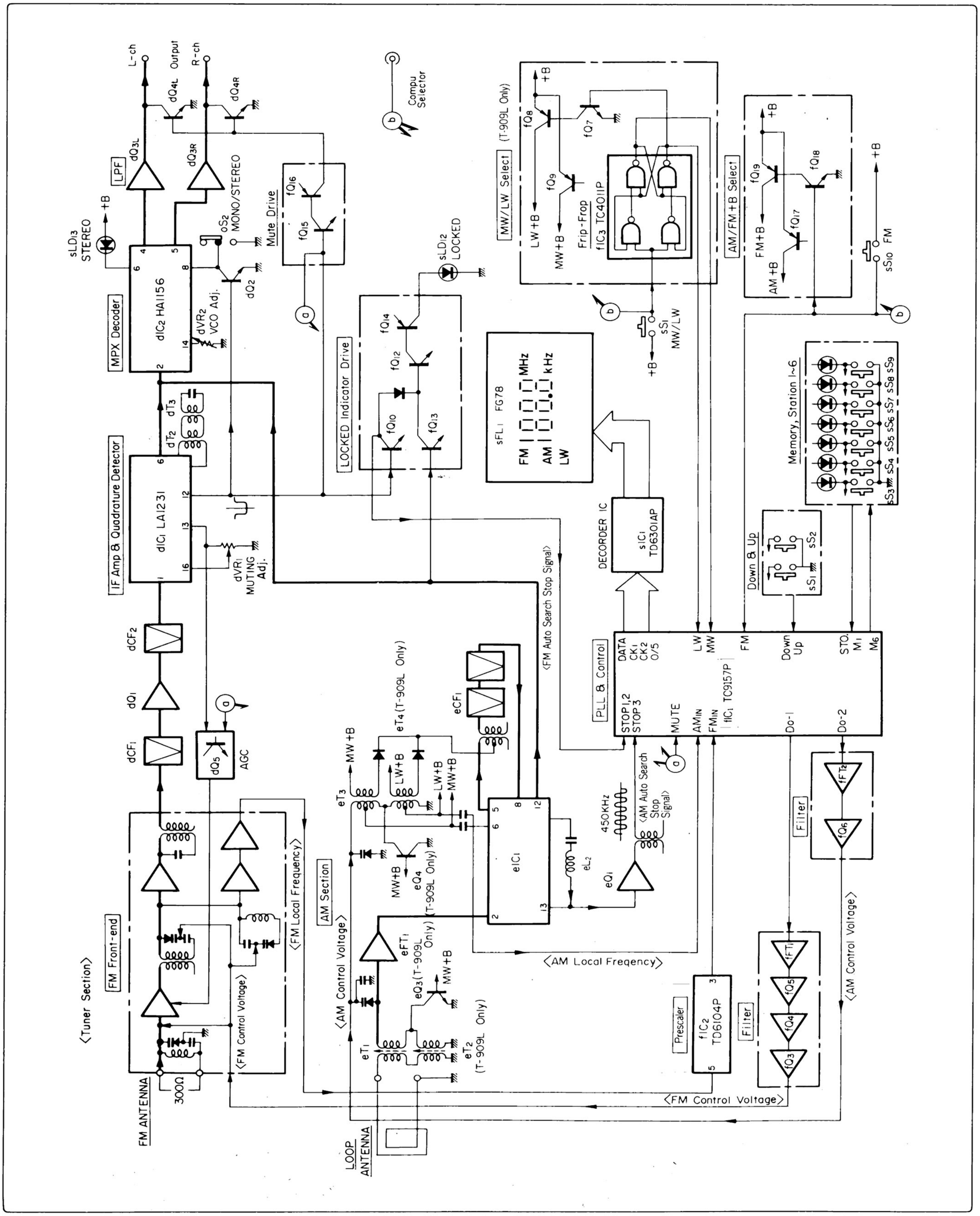

2. ADJUSTMENTS

2-1. FM Adjustment (See Top View on Page 11)

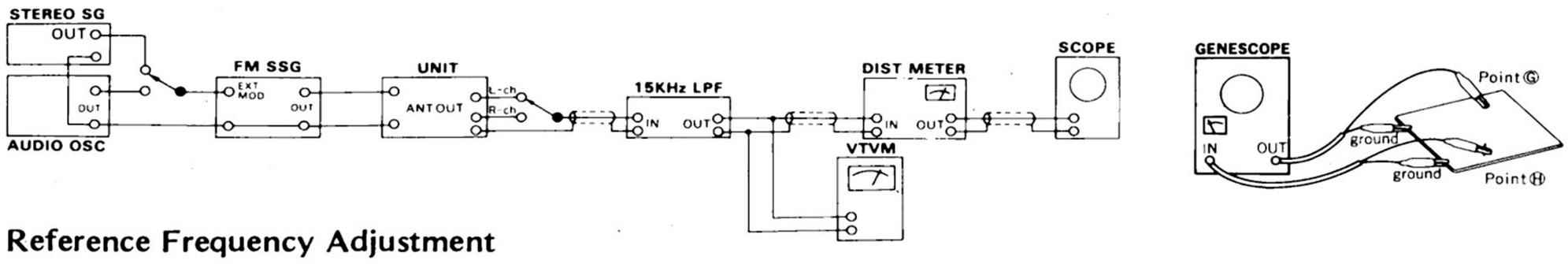

1) FM IF & Reference Frequency Adjustment

Note: 1. SELECTOR . . . . . FM
2. FM MUTING/MODE . . . . . OFF/MONO

STEP	SUBJECT		FEED SIGNAL FROM	FEED SIGNAL TO	MEASURE OUTPUT	ADJUST	ADJUST FOR	REMARKS
1.	Reference Frequency Adj.		No Input	–	Between Point Ⓐ (Pin 24 of fIC1) & Earth Freq. counter • See Parts Location F-3893 on Page 9	fTC1 (F-3893)	25 kHz	• Short between Point B & Point C (Pin 36 & 42 of fIC1)
2.	IF Coil Adj.		98MHz ANT Input 20dBf (14.8dB), 1kHz (100% MOD.), FM SSG	ANT terminal 300Ω	Between Point Ⓓ (dVR1, F-3862) & DC Volt Meter • See Parts Location F-3862 on Page 7	IFT Coil (Front-end)	Max. DC Volt	
3.	Discriminator Coil Adj. In case of using Genescope	1	No Input	–	Between Point Ⓔ & Point Ⓕ (Across dR41, F-3767) DC Volt Meter • See Parts Location F-3767 on Page 8	dT2 (F-3767)	DC 0V ±30mV	• Repeat procedures as stated in subject 1 & 2.
		2	Output 80dB, Genescope	Point Ⓖ	Between Point Ⓗ (dD2) & Earth • See Parts Location F-3767 on Page 8	dT3 (F-3767)	Steep linearity of S curve. Make symmetrical S curve.	
	Discriminator Coil Adj. In case of using Dist meter	1	No Input	–	Between Point Ⓔ & Point Ⓕ (Across dR41, F-3767) DC Volt Meter • See Parts Location F-3767 on Page 8	dT2 (F-3767)	DC 0V ±30mV	• Repeat procedures as stated in subject 1 & 2. • Since the dT1 has already adjusted, perform only a fine adjustment in this procedure.
		2	98MHz ANT Input 65dBf (59.8dB), 1kHz (100% MOD.), FM SSG	ANT terminal 300Ω	• REC OUT L-CH or R-CH VTVM & SCOPE	dT3, (F-3767)	Min. THD	

2) FM STEREO Adjustment

Note: 1. SELECTOR . . . . . FM
2. FM MUTING/MODE . . . . . ON/AUTO

STEP	SUBJECT	FEED SIGNAL FROM	FEED SIGNAL TO	MEASURE OUTPUT	ADJUST	ADJUST FOR	REMARKS
1.	PLL VCO Adj.	98MHz ANT Input 65dBf (59.8dB), FM SSG, Pilot 19kHz (9% MOD.), R or L MODE 1kHz + Pilot (100% MOD.), STEREO SG	ANT terminal 300Ω	Stereo indicator	dVR2 (F-3767)	Light indicator	Adjust the dVR2 within center of lighting level
	PLL VCO Adj. In case of using Freq. Counter	98MHz ANT Input 65dBf (59.8dB), FM SSG, No MOD.	Same as above	Between Point Ⓘ (Pin 10 of dIC2) & Earth Freq. counter • See Parts Location F-3767 on Page 8	dVR2 (F-3767)	19kHz ±50Hz	
2.	Muting level Adj.	98MHz ANT Input 22dBf (16.8dB), FM SSG Pilot 19kHz (9% MOD.), L or R MODE 1kHz + Pilot (100% MOD.), STEREO SG.	Same as above	Stereo indicator or OUTPUT L-CH or R-CH VTVM & SCOPE	dVR1 (F-3862)	Output Signal comes out.	

www.hifiengine.com

ADJUSTMENT FOR FM

There are two kind in indication of FM SSG output attenuator
1. Attenuator with marking of 75Ω open . . . . open indication type.
2. Attenuator with marking of 75Ω load or close . . . . . load or close indication type.

FM SG output level in this FM adjustment are described as open indication type.
To feed FM signal, a dummy antenna circuit as Fig. 2-1 must be connected between FM SG output and ANT terminal (300Ω) of the unit.

Fig. 2-1

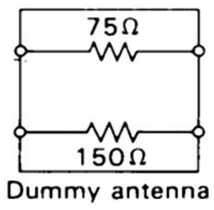

Dummy antenna

- The following table shows relations among FM SG attenuator indication (dB), available power ratio (dBf) and antenna terminal voltage (dB/μV) in each indication type.

	FM SG Attenuator Indication	Available Power Ratio	Antenna Terminal Voltage
Open indication type	0 dB 66 dB	−0.8 dBf 65.2 dBf	−6 dB/μV 60 dB/μV
Load or close indication type	0 dB 60 dB	5.2 dBf 65.2 dBf	0 dB/μV 60 dB/μV

2-2. AM Adjustment (See Top View on Page 11)

Note: SELECTOR . . . . . AM

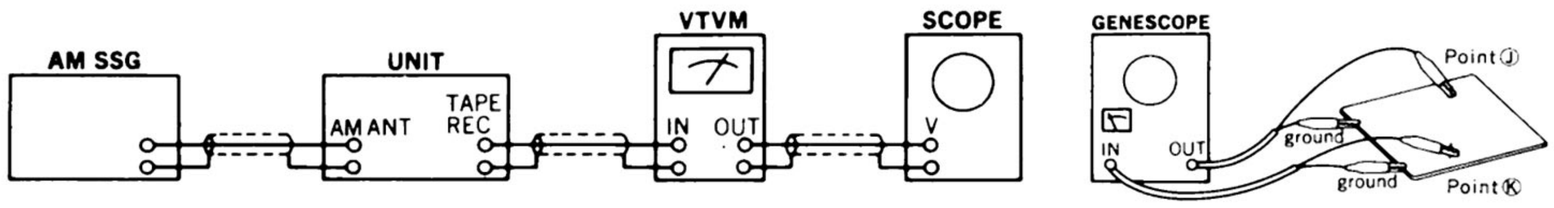

(1) AM IF Adjustment & MW (AM) Tuning Adjustment

Note: SELECTOR . . . . . MW (T-909L Only)

STEP	SUBJECT	FEED SIGNAL FROM	FEED SIGNAL TO	MEASURE OUTPUT	ADJUST	ADJUST FOR	REMARKS
1.	IF Coil Adj.	Genescope Output 60dB	Point Ⓙ (eTC2, F-3862)	Between Point Ⓚ (eR26) & Earth • See Parts Location F-3862 on Page 7, F-3746 on Page 8.	eCF1, eL2 (F-3746)	Max. Waveform	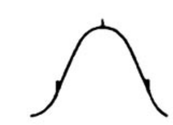
2.	522kHz (or 520kHz) Tuning Adj.	No Input	—	Between Point Ⓛ (eR1, F-3862) & Earth DC Volt Meter	eT3 (F-3862)	1V	Before adjustments of step 2 and 3, tune the upper (1610kHz), lower (522kHz) band edge frequency as below procedure.
3.	1610kHz (or 1611kHz) Tuning Adj.	No Input	—	Same as above	eTC2 (F-3862)	9V	
4.	603kHz (or 600kHz) RF Adj.	603kHz (or 600kHz) ANT Input 30dB 400Hz (30% MOD.), AM SSG	ANT terminal	REC OUT L-CH or R-CH VTVM & Scope	eT1 (F-3862)	Max. Output	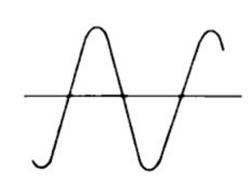
5.	1404kHz (or 1400kHz) RF Adj.	1400kHz (or 1400kHz) ANT Input 30dB 400Hz (30% MOD.), AM SSG	Same as above	REC OUT L-CH or R-CH VTVM & Scope	eTC1 (F-3862)	Max. Output	

•Abbreviations

Equipment
- AM FM Generator Oscilloscope . . . . . Genescope
- AM Standard Signal Generator . . . . . AM SSG
- FM Standard Signal Generator . . . . . FM SSG
- FM Stereo Generator . . . . . Stereo SG
- Oscilloscope . . . . . Scope
- Audio Oscillator . . . . . Audio Osc.
- Distortion Meter . . . . . Dist. Meter

Others
- Antenna . . . . . ANT.
- Modulation . . . . . MOD.
- Total Harmonic Distortion . . . . . T.H.D.

www.hifiengine.com

(2) LW Tuning Adjustment (T-909L Only)

Note: SELECTOR . . . . . LW

STEP	SUBJECT	FEED SIGNAL FROM	FEED SIGNAL TO	MEASURE OUTPUT	ADJUST	ADJUST FOR	REMARKS
1.	153kHz Tuning Adj.	No Input	—	Between Point Ⓛ (eR1, F-3862) & Earth DC Volt Meter	eT4 (F-3862)	1V	
2.	360kHz Tuning Adj.	No Input	—	Same as above	eTC4 (F-3862)	9V	
3.	170kHz RF Adj.	170kHz ANT Input 30dB 400Hz (30% MOD.), AM SSG	ANT terminal	REC OUT L-CH or R-CH VTVM & Scope	eT2 (F-3862)	Max. Output	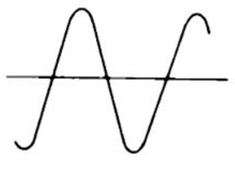
4.	300kHz RF Adj.	300kHz ANT Input 30dB 400Hz (30% MOD.) AM SSG	Same as above	REC OUT L-CH or R-CH VTVM & Scope	eTC3 (F-3862)	Max. Output	

3. INTERIOR BLOCK DIAGRAM OF IC

- **LA1231N (IF & Quadrature Detector IC)**

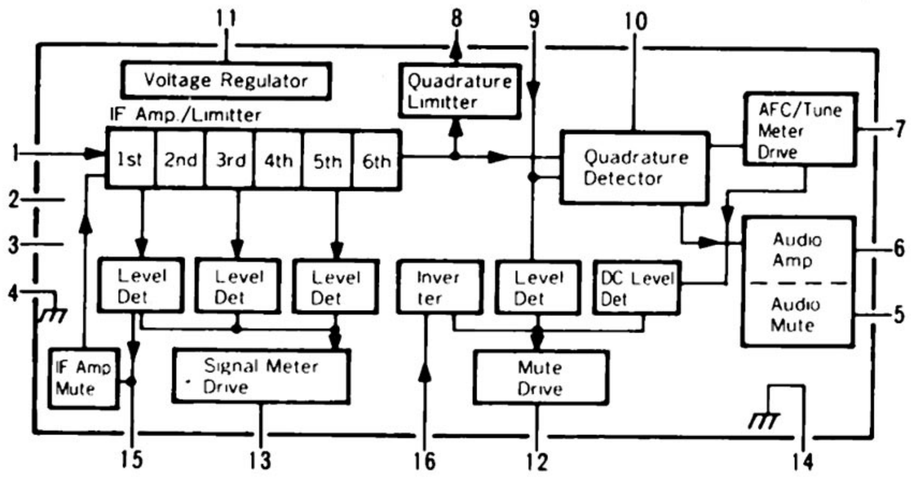

- **HA1197 (AM Tuner IC)**

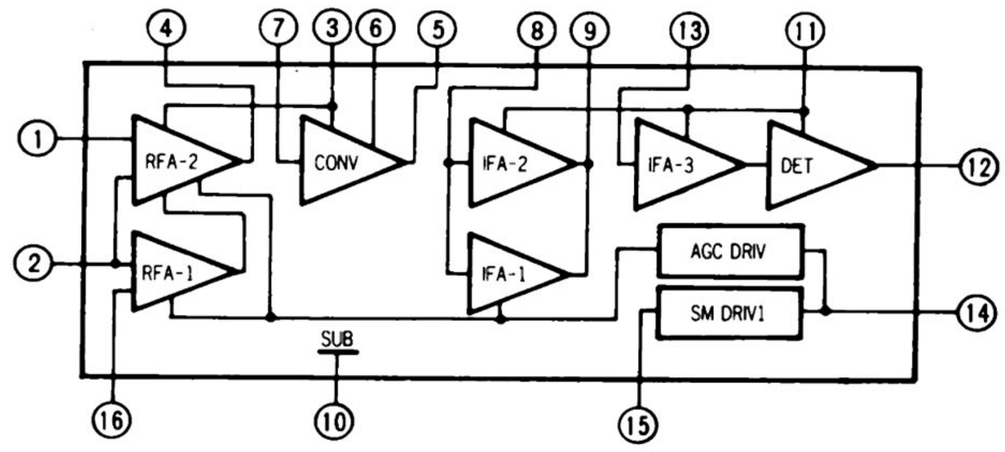

- **HA1156 (MPX IC)**

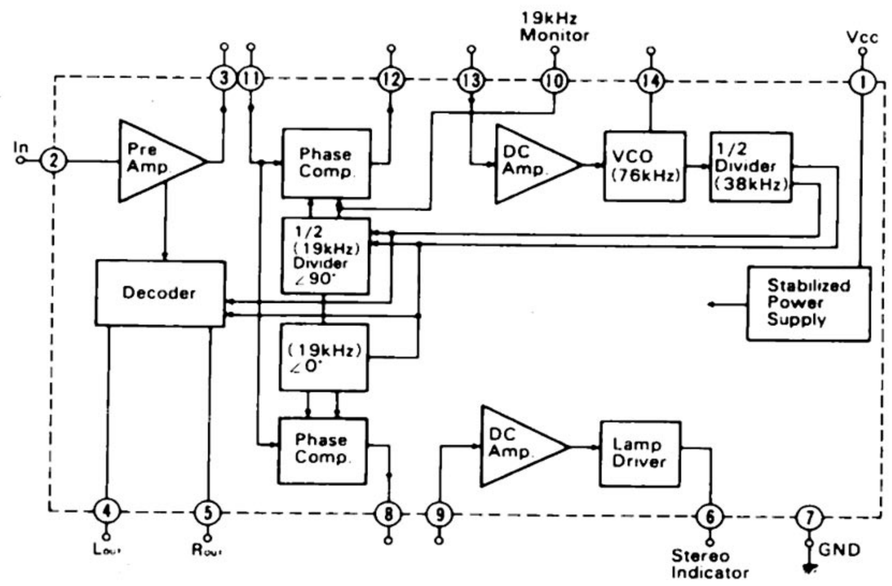

- **TD6104P (Prescaler IC)**

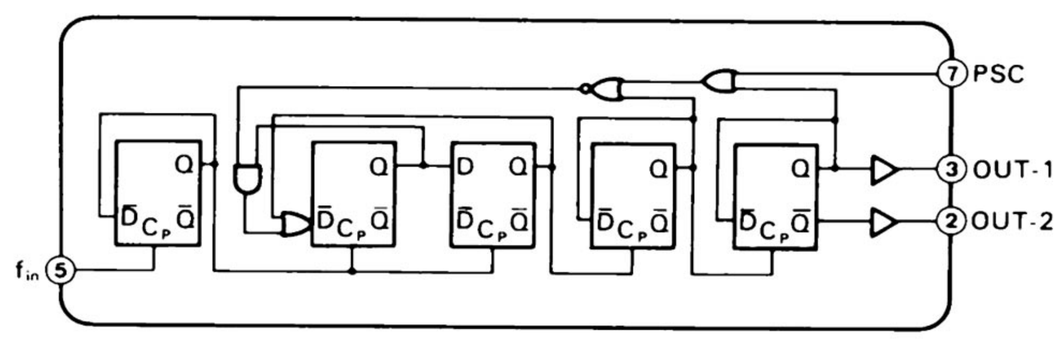

www.hifiengine.com

• TD6301P (7 Segment Decorder IC)

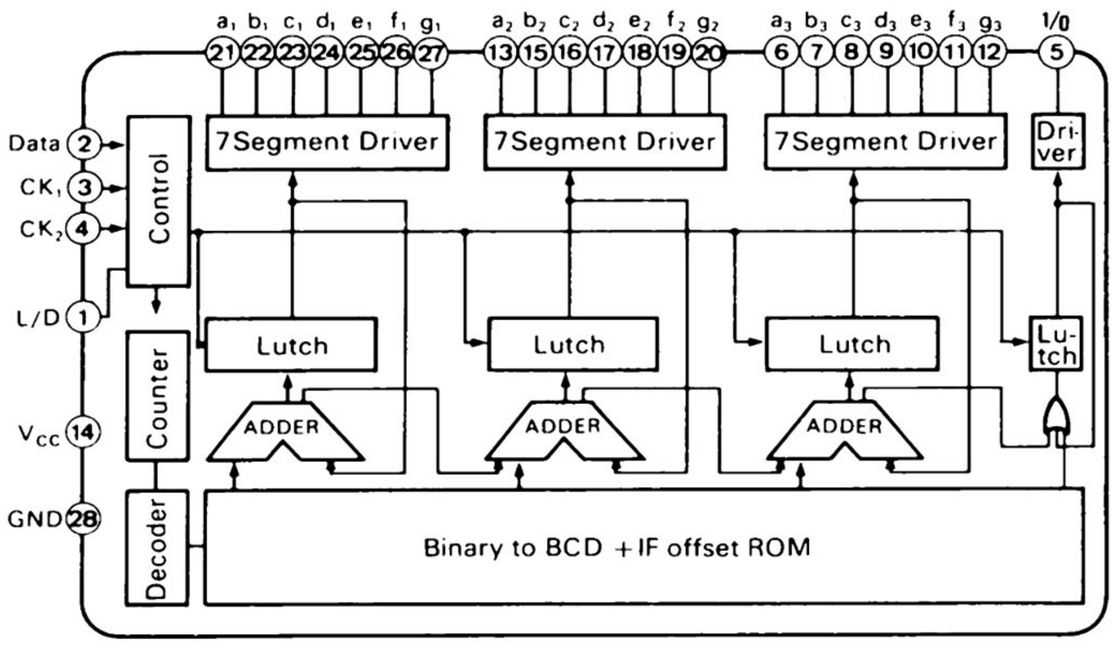

• TC4011P (Quard NAND IC)

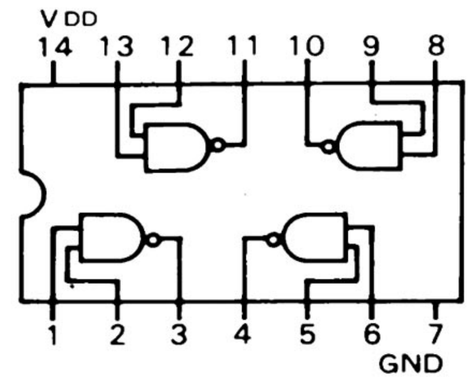

• TC9157P (PLL & Control IC)

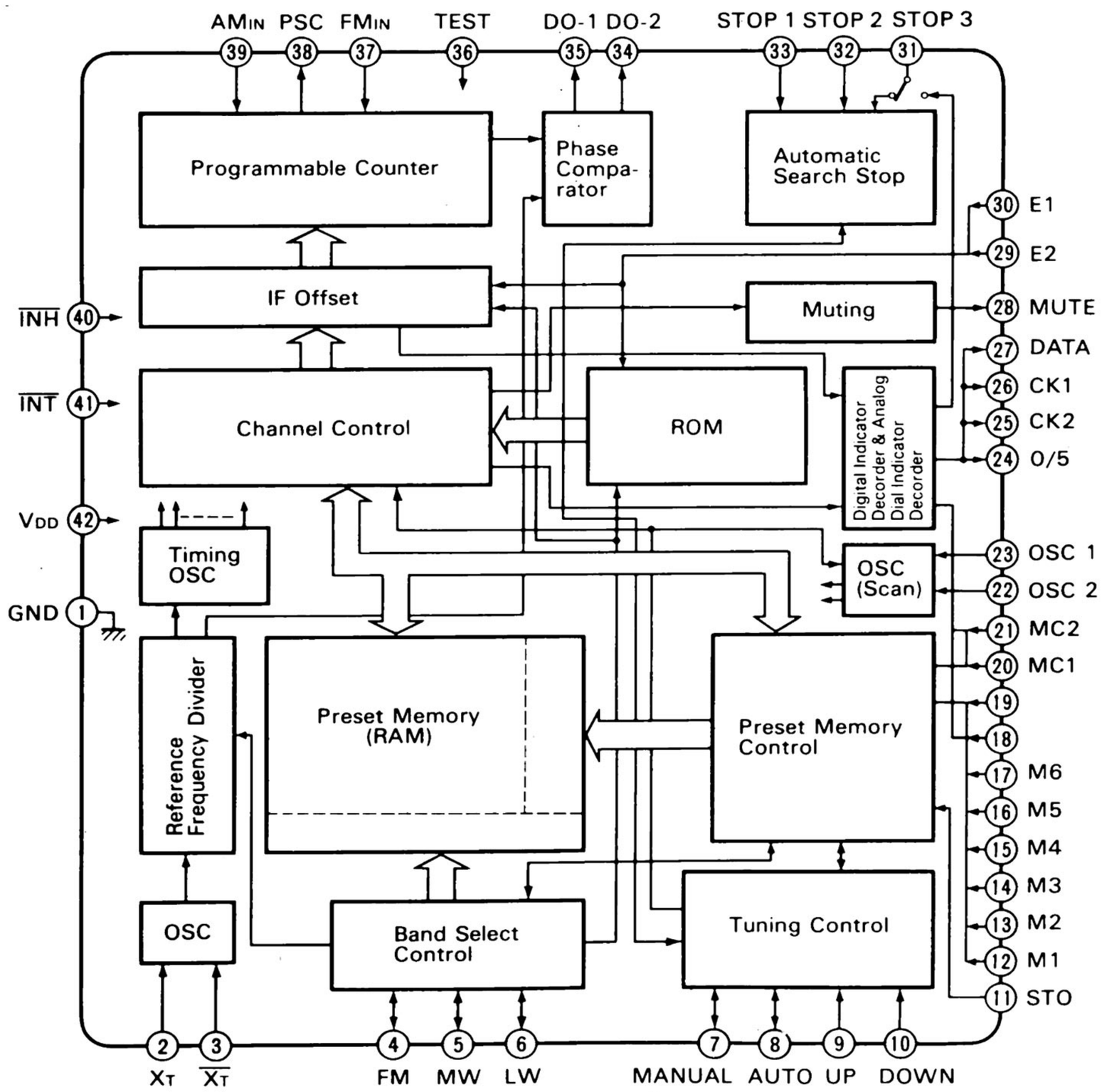

www.hifiengine.com

• Terminal Function of LSI-TC9157P

Pin No.	Pin Name	Functions
2, 3	X_T X_T	Terminals to connect a quartz oscillator for generating a reference frequency.
4 5 6	FM MW LW	Terminals to input a signal for switching FM/MW/LW band.
7 8	MANUAL AUTO	Terminal to input a signal for switching the manual operation to automatic search operation or vice versa in the UP/DOWN tuning mode. "H": Automatic, "L": Manual
9 10	UP DOWN	Terminals to input a signal from the tuning key. * In manual operation: When the key is kept depressed for 0.3 sec or more in one-step/one-push step feeding, the operation changes to fast forwarding; when the key is released, the operation stops at the next stop. In this case, even if there is a station on the way, the station is neglected. * In automatic search operation: When the key is depressed once, the automatic search operation starts and stops automatically after having selected the desired station.
11	STO	Terminal to input a signal for storing data in the preset memory unit. Input/output terminal in which a LED driver is provided. * When depressing the STO key, the STO lamp comes on. Next, when any desired memory No. key is depressed, the data on receiving frequency is written into the memory unit and the STO lamp goes off. * When the STO key is depressed and the memory No. key is not depressed, the frequency data is released automatically.
12 17	M1 M6	Terminals to input a signal for designating memory address. Input/output terminals in which a LED driver is provided. * Terminals M_1 to M_6 designate the addresses of FM memory unit in FM receiving and the addresses of AM memory unit in AM receiving. * When depressing the STO key and any desired station key of M_1 to M_6, the data is written into the memory unit. * When depressing any desired station key of M_1 to M_6, the data is read out.
22 23	OSC 2 OSC 1	Terminal to connect a condenser and resistor for the oscillator for determinating the speed of AM automatic search operation. Terminal to connect a condenser and resistor for the oscillator for determinating the speed of FM automatic search operation.
24 25 26 27	0/5 CK2 CK1 DATA	Terminals to output the data for displaying the received frequency digitally and a timing signal. The data fed to the driver TD6301P for displaying a static frequency and the timing signal are outputted once only when the frequency is updated in such case as when the power supply is tuned on, the UP/DOWN key is depressed, the automatic scanning operation is made, the data are read out of the memory unit, or FM/AM is switched. In the ordinary receiving state, this terminal is fixed to a "L" level. * 0/5: For displaying 50 kHz during FM receiving in Europe. * Data: Binary coded frequency data and receiving band. * CK-1, CK-2: Initialize and transfer clock signals.

Pin No.	Pin Name	Functions
28	MUTE	Terminal to output the muting signal. The terminal is kept in "L" level in ordinary state, and in "H" level in muting.
29 30	E2 E1	Terminals to input a signal for selecting destinations of Japan, USA, and Europe. E_1 E_2 Mode 0 0 Japan 1 0 Europe 0 1 USA (MW 9kHz) 1 1 USA (MW 10kHz) * Inputs of terminals E_1 and E_2 are read and latched in INH = L state and in FM/AM switching.
31	STOP 3	When a IF450 kHz signal is applied to this terminal during automatic search operation, the scanning operation stops.
32	STOP 2	Terminal to input a signal for performing the automatic search stop. When a "H" level signal is applied to STOP 1 and this terminal during automatic search operation, the scanning operation stops.
33	STOP 1	Terminal to input a signal for slowing the speed of scanning operation. When a "H" level signal is applied to this terminal during automatic search operation, the speed of scanning operation halves.
34 35	DO-2 DO-1	Terminals to output a signal from a phase comparator. These terminals can be used for FM and AM, separately, since the same signal is outputted from the terminals D_0-1 and D_0-2 at the same time.
36	TEST	Terminal to input a signal of test mode. Test mode in "H" level.
37	FM_{IN}	Terminal to input a signal from the FM programmable counter. An amplifier is provided in the input.
38	PSC	Terminal to output a signal for controlling the Prescaler IC of TD6104P.
39	AM_{IN}	Terminal to input a signal from the AM programmable counter. An amplifier is provided in the input.
40	INH	Terminal to input a signal of inhibit. Ordinary operation in "H" level; inhibit operation in "L" level.
41	INT	Terminal to input an initialize signal. This terminal changes to H level in the ordinary operation and to L level in the initialize operation.
42 1	V_{DD} GND	Power supply terminals. 5V ±0.5V.

www.hifiengine.com

4. PARTS LOCATION & PARTS LIST

•Since some of capacitors and resistors are omitted from parts lists in this Service Manual, refer to the Common Parts List for capacitors & resistors, which was appended previously to Sansui Manual.

4-1. F-3862 FM/AM RF & Preset Circuit Board (Stock No. 00708401 = T-909/00708405 = T-909L)

Component Side

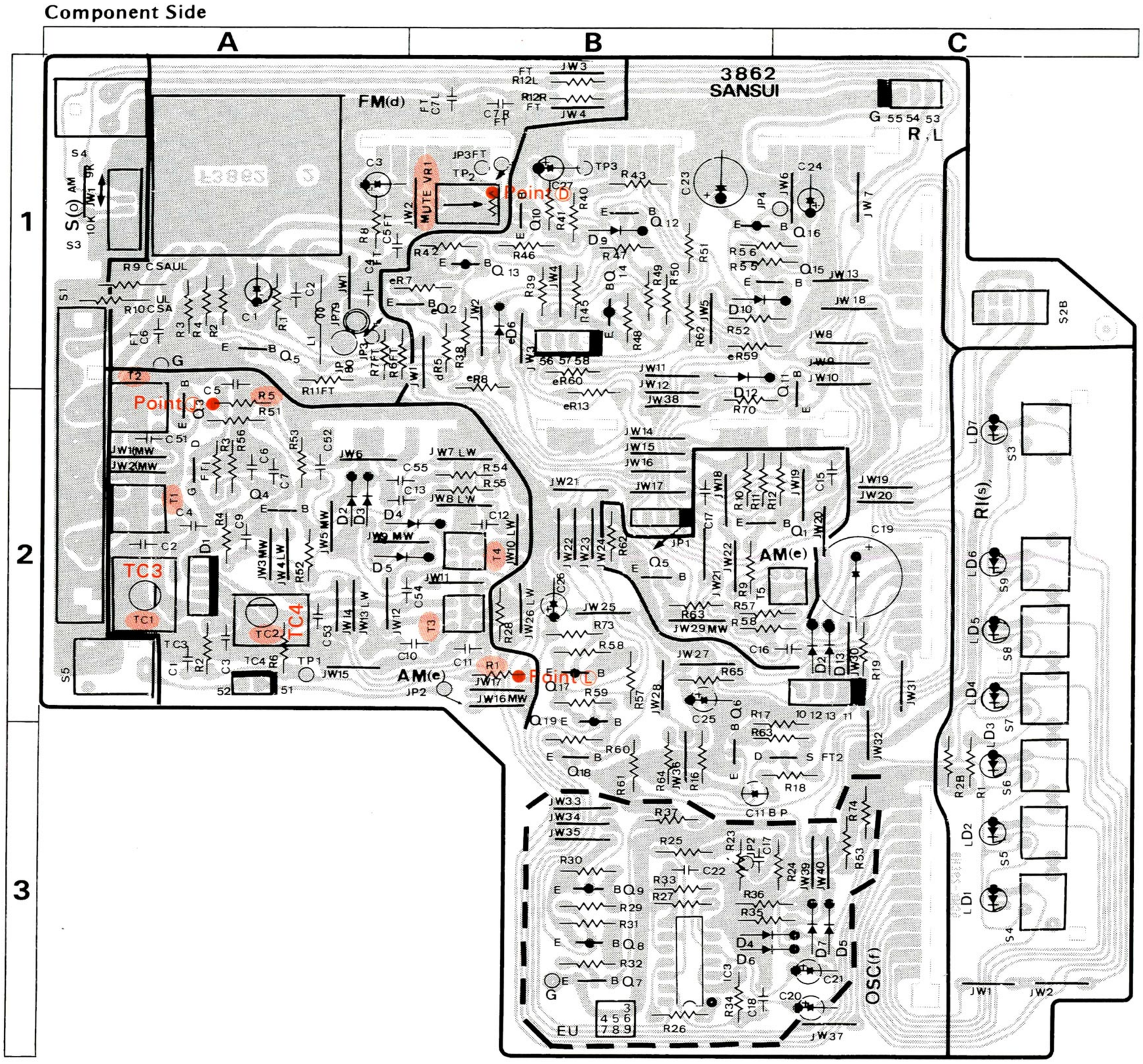

Parts List

Parts No.	Stock No.	Description
dZ1	46170000	FM Frontend Pack
•Transistor		
dQ5	46367301	2SC2458
	or 46367101	2SC2603
	or 46391901	2SC2785
dL1	07250300	Peaking Coil 2.2μH
dVR1	10370700	10kΩ (B) SVR, mute adj.
•Transistor		
eQ1	46393201	2SC2786
eQ2	46367301	2SC2458
	or 46367101	2SC2603
	or 46391901	2SC2785
eQ3, 4	46118801	2SC2878 <T-909L Only>
eQ5	46367301	2SC2458 <T-909L Only>
	or 46367101	2SC2603 <T-909L Only>
	or 46391901	2SC2785 <T-909L Only>
•FET		
eFT1	46393000, 1	2SK192A-Y, GR
•Varactor Diode		
eD1	46146300	KV1236Z

Parts No.	Stock No.	Description
•Diode		
eD2~6	46086000	1S1588 <T-909L Only>
	or 03117600	1S2473D <T-909L Only>
eR64	46229000	100Ω 1/2W N.I.R.
•Trimmer Capacitor		
eTC1, 2	46095600	20pF <T-909 Only>
eTC(1), 3	46370700	16pF (Dual type) <T-909L Only>
eTC(2), 4	46370700	16pF (Dual type) <T-909L Only>
•Coil		
eT1	46394600	AM RF Coil <T-909 Only>
eT2	46397900	LW RF Coil <T-909L Only>
eT3	46398200	AM OSC Coil <T-909 Only>
eT4	46398000	LW OSC Coil <T-909L Only>
eT5	46413600	AM IF Coil
•Transistor		
fQ6	46367301	2SC2458
	or 46367101	2SC2603
	or 46391901	2SC2785
fQ7	46367301	2SC2458 <T-909L Only>
	or 46367101	2SC2603 <T-909L Only>
	or 46391901	2SC2785 <T-909L Only>

www.hifiengine.com

Parts List <F-3862>

Parts No.	Stock No.	Description
fQ8, 9	46367201	2SA1048 <T-909L Only>
	or 46367001	2SA1115 <T-909L Only>
	or 46392001	2SA1175 <T-909L Only>
fQ10~12	46367301	2SC2458
	or 46367101	2SC2603
	or 46391901	2SC2785
fQ13, 14	46367201	2SA1048
	or 46367001	2SA1115
	or 46392001	2SA1175
fQ15	46367301	2SC2458
	or 46367101	2SC2603
	or 46391901	2SC2785
fQ16, 17, 19	46367201	2SA1048
	or 46367001	2SA1115
	or 46392001	2SA1175
fQ18	46367301	2SC2458
	or 46367101	2SC2603
	or 46391901	2SC2785
●FET		
fFT2	03703001, 2	2SK117-Y, GR
	or 03703401, 2	2SK163-K2, L1

Parts No.	Stock No.	Description
●IC		
fIC3	03604100	TC4011P <T-909L Only>
●Diode		
fD4~7	03117600	1S2473D <T-909L Only>
	or 46086000	1S1588 <T-909L Only>
fD9~13	03117600	1S2473D
	or 46086000	1S1588
fR73	46229000	100Ω 1/2W N.I.R.
fC11	08451900	3.3μF 50V E.B.
fC19	46151500	2200μF 6.3V E.L.
oS1	46364200	Antenna Terminal
oS3	46177200	Slide SW., 9kHz/10kHz
oS4	46438100	Output Terminal
oS5	46411800	Mini Jack, Compu Selector
sLD1~6	07250900	LED TLG-123 (A)
sS3	46395900	Push SW., Memory
sS4~9	46395900	Push SW., Preset station

4-2. F-3746 AM IF Circuit Board (Stock No. 00708101)

Component Side

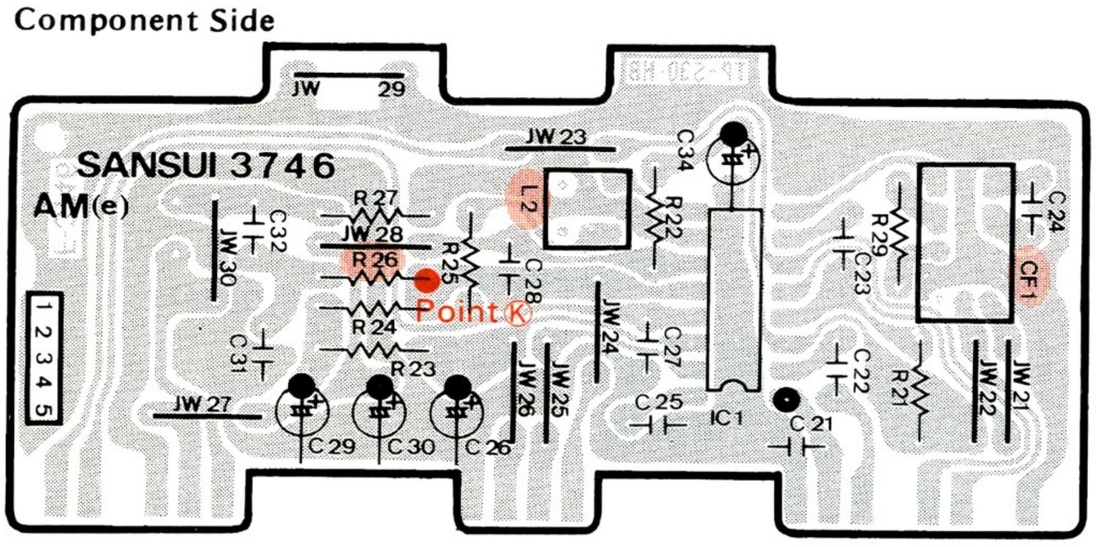

Parts List

Parts No.	Stock No.	Description
●IC		
eIC1	03603900	HA1197
eCF1	07254000	Ceramic Filter 455 kHz
eL2	46369600	AM IF Coil

4-3. F-3767 FM IF Circuit Board (Stock No. 00708301)

Component Side

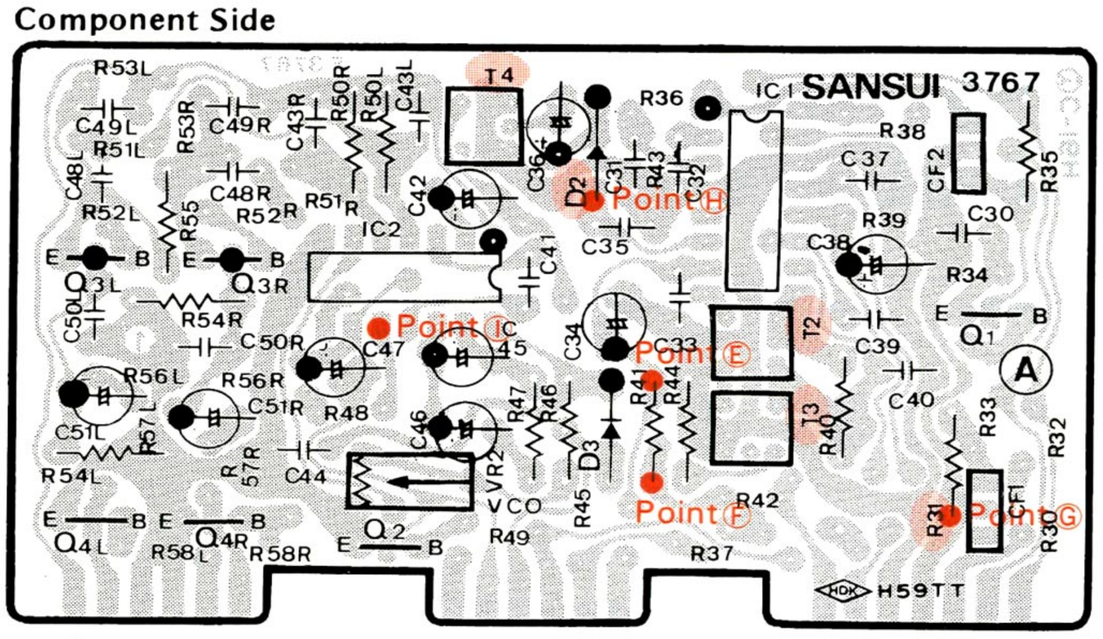

Parts List

Parts No.	Stock No.	Description
●Transistor		
dQ1	46393101	2SC2839
dQ2	46391901	2SC2785
dQ3	46392001	2SA1175
dQ4	46391901	2SC2785
●IC		
dIC1	07191200	LA1231N
dIC2	03603000	HA1156W
●Diode		
dD2	03117600	1S2473D
dD3	03117600	1S2473D
dCF1	46202500	Ceramic Filter 10.7 MHz
dCF2	46202500	Ceramic Filter 10.7 MHz
dT2	46369100	FM Detector Coil
dT3	46369200	FM Detectot Coil
dVR2	07218000	6.8kΩ (B) SVR, VCO adj.

www.hifiengine.com

4-4. F-3878 Digitally Display Circuit Board (Stock No. 00708801)

Component Side

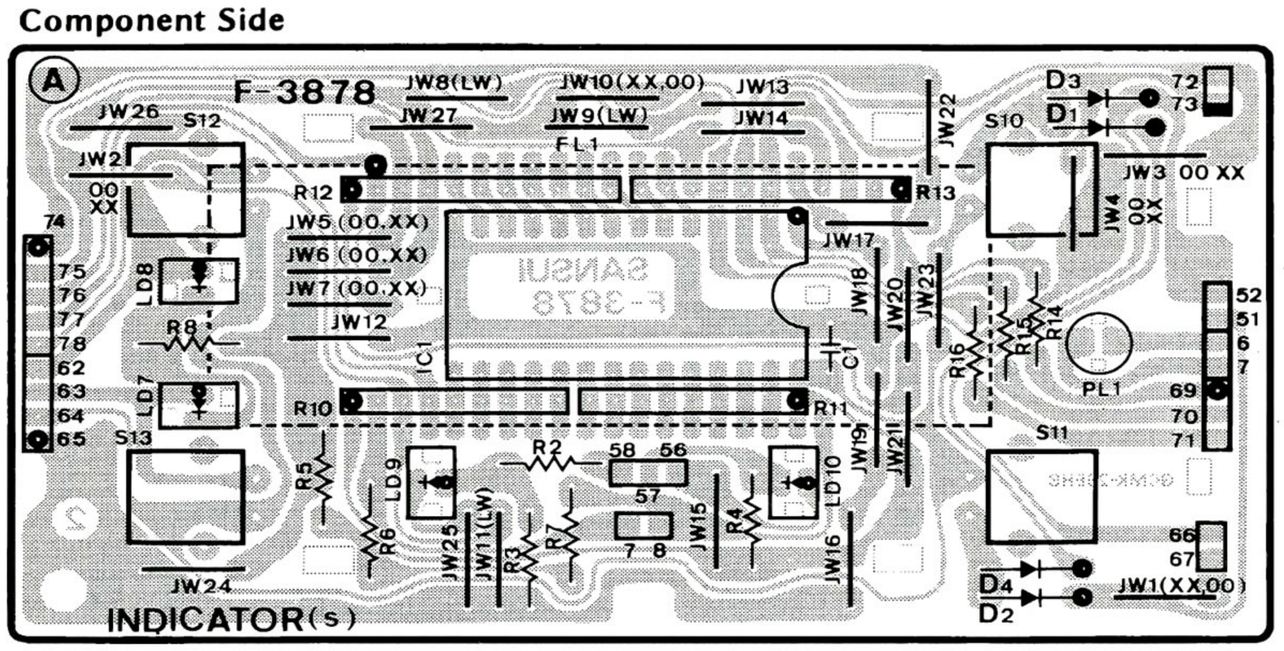

Parts List

Parts No.	Stock No.	Description
●IC		
sIC1	46410100	TD6301AP
●Diode		
sD1	03117600	1S2473
	or 46086000	1S1588
sD2	03117600	1S2473
	or 46086000	1S1588
sD3	03117600	1S2473
	or 46086000	1S1588
sD4	03117600	1S2473
	or 46086000	1S1588
sFL1	46335600	FL. Display Tube

Parts No.	Stock No.	Description
●Light Emitting Diode		
sLD7~10	46176900	TLS-123
sR10~13	46045900	Array Resistor
sPL1	46315900	Pilot Lamp 150mA 12V
sS10	46395900	Push SW., FM
sS11	46395900	Push SW., AM
sS12	46395900	Push SW., AUTO
sS13	46395900	Push SW., MANUAL

4-5. F-3893 PLL & Control Circuit Board (Stock No. 00708701 = T-909/00708705 = T-909L)

Component Side

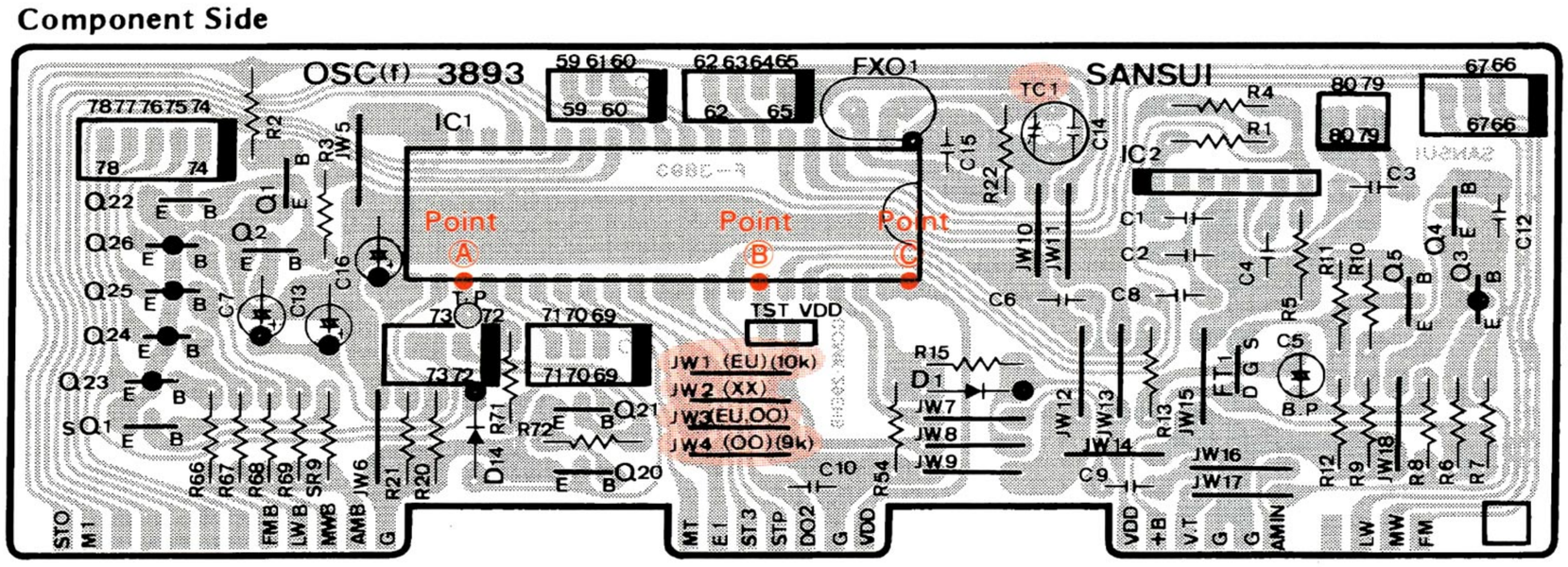

Parts List

Parts No.	Stock No.	Description
●Transistor		
fQ1, 2, 4	46367301	2SC2458
	or 46367101	2SC2603
	or 46391901	2SC2785
fQ3	46367201	2SA1048
	or 46367001	2SA1115
	or 46392001	2SA1175
fQ5	46367301	2SC2458
	or 46367101	2SC2603
	or 46391901	2SC2785
fQ20~22	46367301	2SC2458
	or 46367101	2SC2603
	or 46391901	2SC2785
fQ23	46367201	2SA1048
	or 46367001	2SA1115
	or 46392001	2SA1175
fQ24, 25	46367201	2SA1048 <T-909L Only>
	or 46367001	2SA1115 <T-909L Only>
	or 46392001	2SA1175 <T-909L Only>
fQ26	46367201	2SA1048
	or 46367001	2SA1115
	or 46392001	2SA1175

Parts No.	Stock No.	Description
●FET		
fFT1	03703001, 2	2SK117-Y, GR
	or 03703401, 2	2SK163-K2, L1
●IC		
fIC1	46397400	TC9157P
fIC2	07225000	TD6104P
fXO1	07237700	Quartz Element
●Diode		
fD1~3	03117600	1S2473D
	or 46086000	1S1588
fD14	03117600	1S2473D
	or 46086000	1S1588
fC5	08451700	1μF 50V E.B.
fTC1	46095800	45pF
●Transistor		
sQ1	46367301	2SC2458
	or 46367101	2SC2603
	or 46391901	2SC2785

www.hifiengine.com

4-6. F-3823 Power Supply Circuit Board (Stock No. 00708601 = T-909/00708605 = T-909L)

Component Side

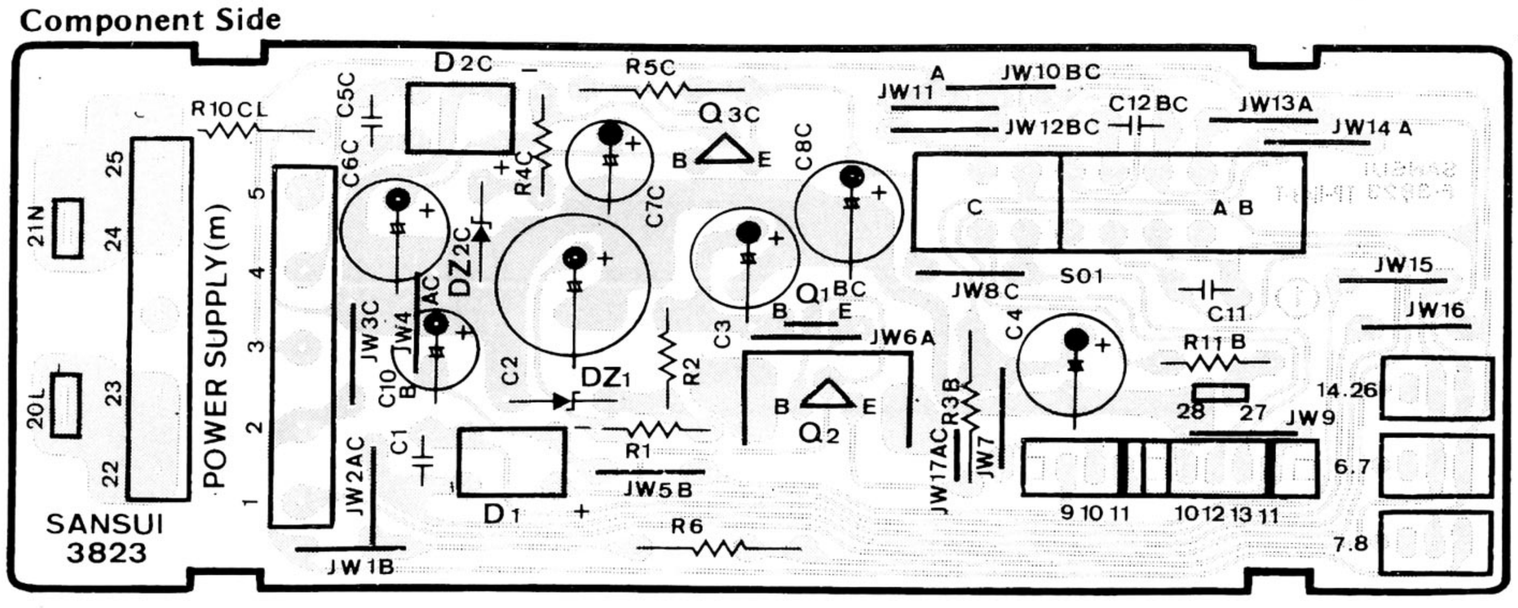

Parts List

Parts No.	Stock No.	Description
●Transistor		
mQ2	03083901	2SD313AL
mQ3	03083901	2SD313AL
●Diode		
mD1	46273600	DBB10-B
mD2	46273600	DBB10-B

Parts No.	Stock No.	Description
●Zener Diode		
mDZ1	03159800	EQA01-14R
mDZ2	07178900	RD6.2E-B
mR6	00190100	470Ω 2W N.I.R.
mSW1	46412400	Push SW., POWER <T-909L>
	46412500	Push SW., POWER <T-909>

● Note: The circuit board, F-3864 is not supplied as the assembled. However, the individual parts on the circuit board are provided by orders.

4-7. F-3864 Tuning UP/DOWN Switch Circuit Board

Component Side

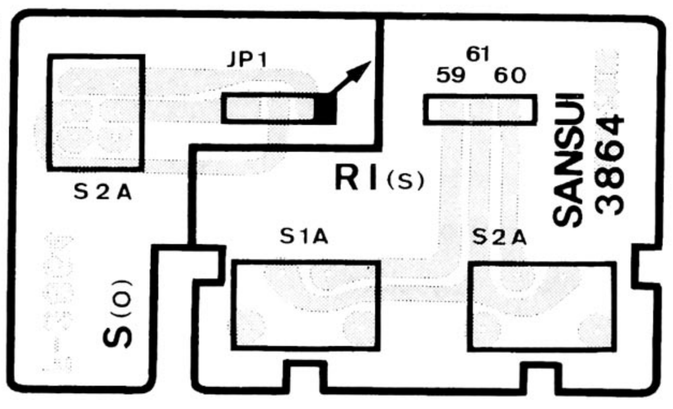

Parts List

Parts No.	Stock No.	Description
oS2	46361000	Push SW., MUTING/MODE
sS1, 2	46396700	Push SW., TUNING

* Concerning Printed Resistor and Printed Silver Pattern

In this model, printed circuit board is used on which carbon resine resistance and silver foil pattern are coated. And it is impossible to replace those parts. Therefore, please keep following procedures when repairing or ordering the parts.

1. When repairing the printed resistor, cut off center portion of the resistor to make complete open circuit. Then solder 1/3 W type carbon resistor to conductor side of the PCB.
2. When repairing the printed silver pattern, solder lead wire to conductor side of the PCB.
3. When ordering the 1/3 W type carbon resistor, read the resistance value from the schematic diagram, and refer to "Common Parts List for Resistors and Capacitors".

● Abbreviations

C.R.	: Carbon Resistor	E.B.	: Bi-Polar Electrolytic Capacitor
S.R.	: Solid Resistor	E.BL.	: Low Leak Bi-Polar Electrolytic Capacitor
Ce.R.	: Cement Resistor	Ta.C.	: Tantalum Capacitor
M.R.	: Metal Film Resistor	F.C.	: Film Capacitor
F.R.	: Fusing Resistor	M.P.	: Metalized Paper Capacitor
N.I.R.	: Non-Inflammable Resistor	P.C.	: Polystyrene Capacitor
C.C.	: Ceramic Capacitor	G.C.	: Gimmic Capacitor
C.T.	: Ceramic Capacitor, Temperature Compensation	V.R.	: Variable Resistor
E.C.	: Electrolytic Capacitor	S.V.R.	: Semi Variable Resistor
E.L.	: Low Leak Electrolytic Capacitor	SW.	: Switch

www.hifiengine.com

5. OTHER PARTS

5-1. Front View

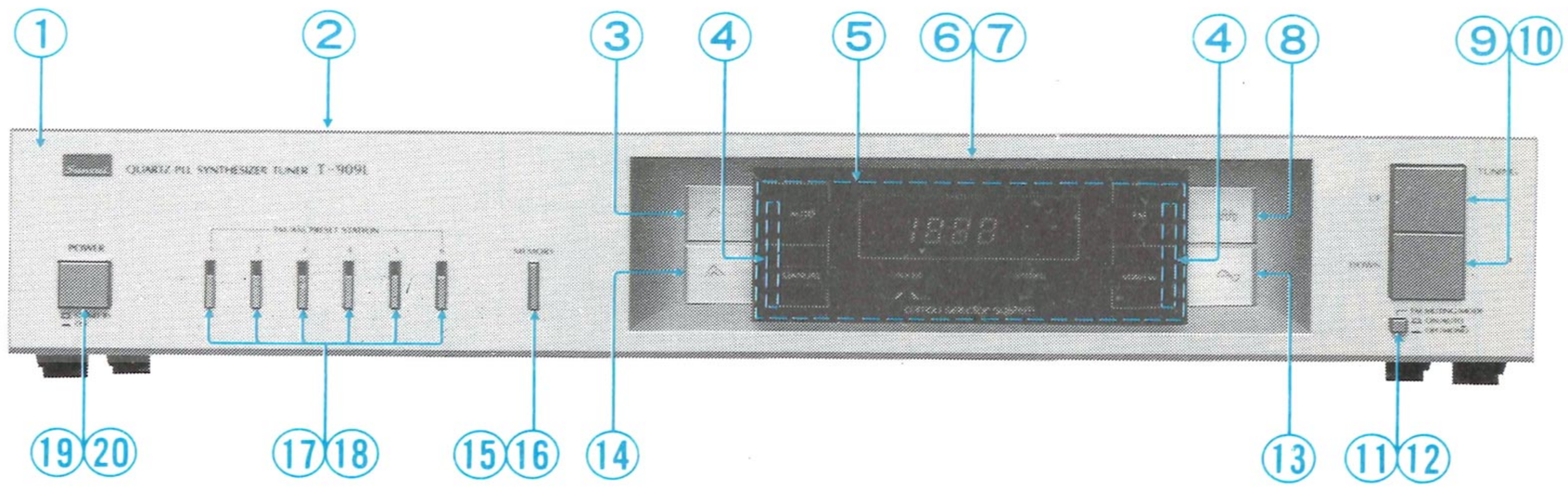

5-2. Top View

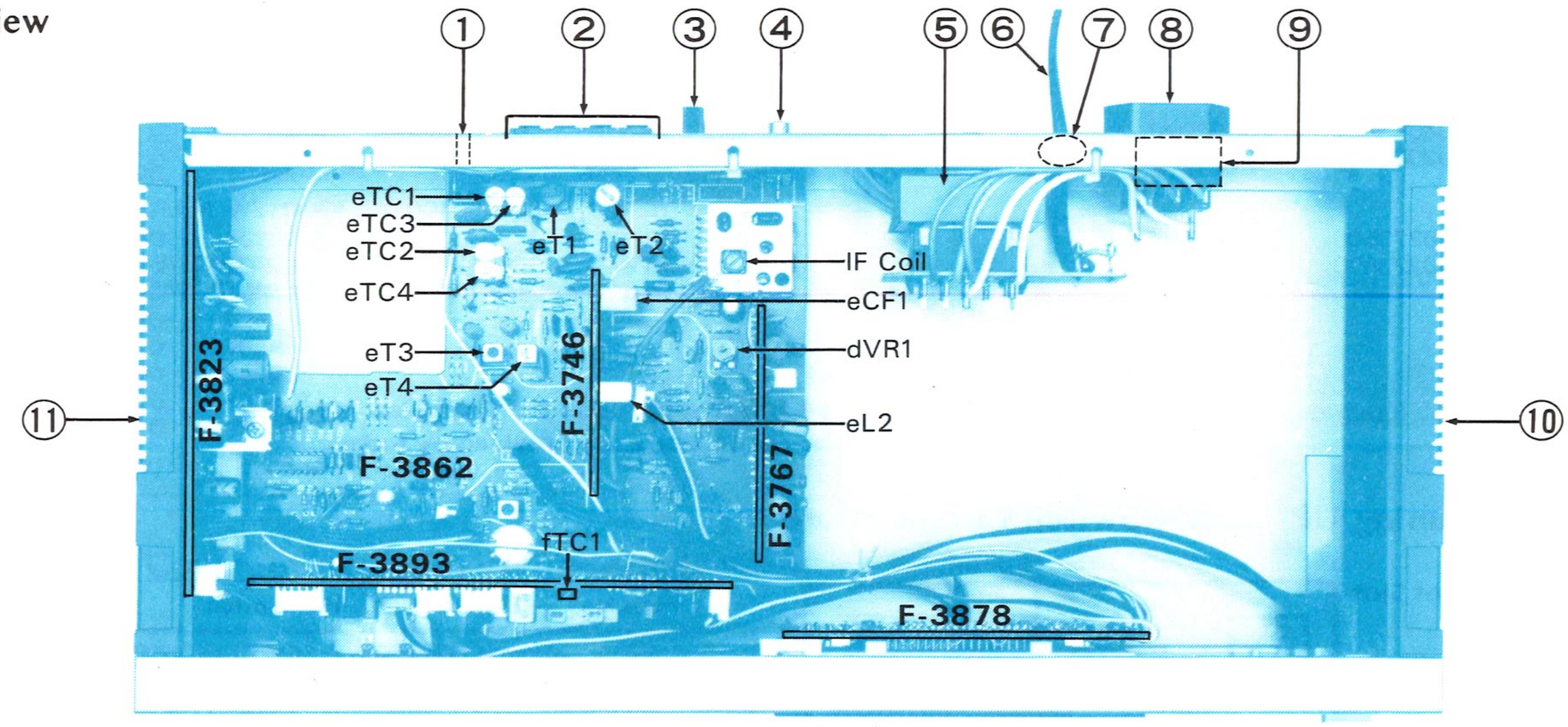

Parts List <Front View>

Parts No.	Stock No.	Description
1	47007100	Front Panel Ass'y (T-909 Silver Model)
	47007200	Front Panel Ass'y (T-909 Black Model)
	47007300	Front Panel Ass'y (T-909L Silver Model)
	47007400	Front Panel Ass'y (T-909L Black Model)
2	07962200	Bonnet
3	07924000	Push Knob, AUTO
4	47071200	Cushion Rubber
5	47011300	Display Holder (Silver Model)
	07945200	Display Holder (Black Model)
6	07945000	Display Cover
7	47009400	Display Panel (Silver Model)
	07953600	Display Panel (Black Model)
8	07924300	Push Knob, FM
9	07976300	Push Knob, UP·DOWN (Silver Model)
	07976400	Push Knob, UP·DOWN (Black Model)
10	46396700	Push SW., UP·DOWN
11	07851100	Push Knob, FM/MUTING (Silver Model)
	47008300	Push Knob, FM/MUTING (Black Model)
12	46361000	Push SW., FM/MUTING
13	07924200	Push Knob, AM
14	07924100	Push Knob, MANUAL
15	47021110	Push Knob, MEMORY (Silver Model)
	07931010	Push Knob, MEMORY (Black Model)
16	46395900	Push SW., MEMORY
17	07931110	Push Knob, PRESET (Silver Model)
	07931210	Push Knob, PRESET (Black Model)
18	46395900	Push SW., PRESET
19	07971210	Push Knob, POWER (Silver Model)
	07911210	Push Knob, POWER (Black Model)
20	46412500	Push SW., POWER (T-909)
	46412400	Push SW., POWER (T-909L)

Parts List <Top View>

Parts No.	Stock No.	Description
1	46411800	Mini Jack, Compu Selector
2	46364200	Antenna Terminal Board
3	22301500	GND Terminal
4	46438100	2P Output Terminal Board
5	15009401	Power Transformer (T-909)
	15009405	Power Transformer (T-909L)
6	38005400	Power Supply Cord (T-909)
	38004500	Power Supply Cord (T-909L)
7	39106000	Strain Relief (T-909)
	39104900	Strain Relief (T-909L)
8	46364900	AC Outlet (T-909)
	46161000	AC Outlet (T-909L)
9	07204700	Slide SW., Voltage Selector (220/240V T-909L)
10	07965500	Side Panel Ass'y (Right)
11	07965400	Side Panel Ass'y (Left)

www.hifiengine.com

6. SCHEMATIC DIAGRAM 6-1. T-909

*Design and specifications subject to change without notice for improvement.
*La presention et les spécifications sont susceptibles d'être modifiées sans préavis par suites d'améliorations éventuelles.
*Anderungen, die dem technischen Fortschritt dienen, bleiben vorbehalten.

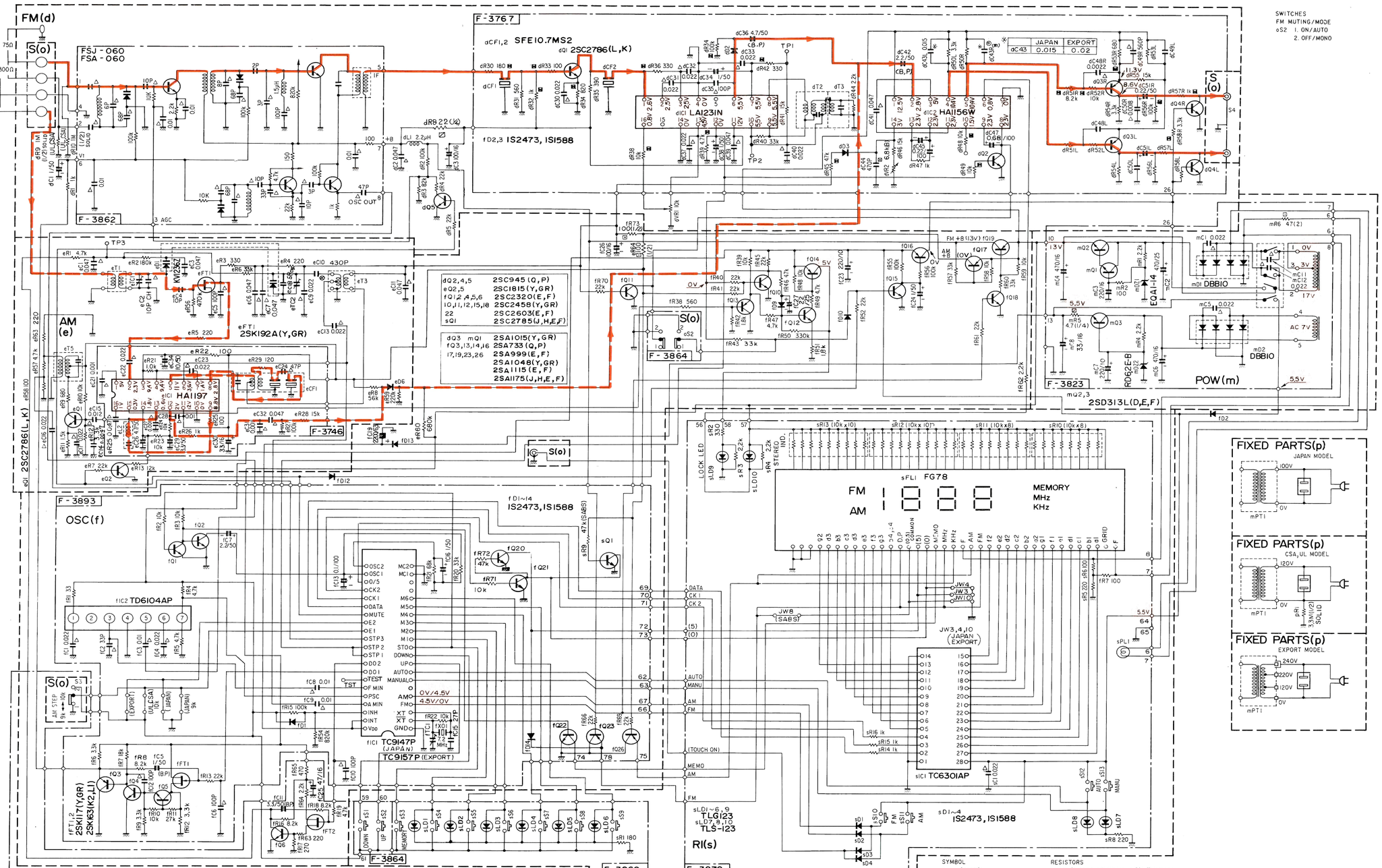

FM Signal Line

AM Signal Line

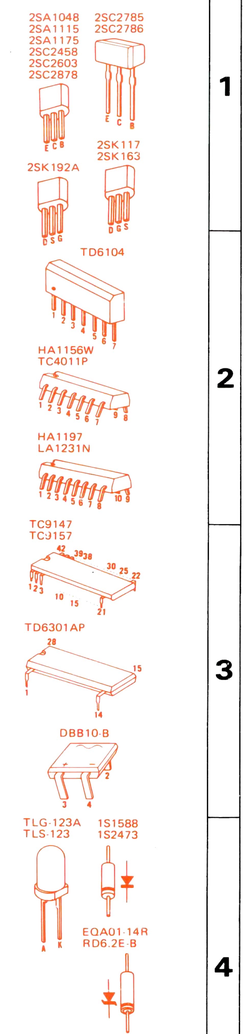

A B C D E F G H

6-2. T-909L

*Design and specifications subject to change without notice for improvement.
*La présention et les spécifications sont susceptibles d'être modifiées sans préavis par suites d'améliorations éventuelles.
*Änderungen, die dem technischen Fortschritt dienen, bleiben vorbehalten.

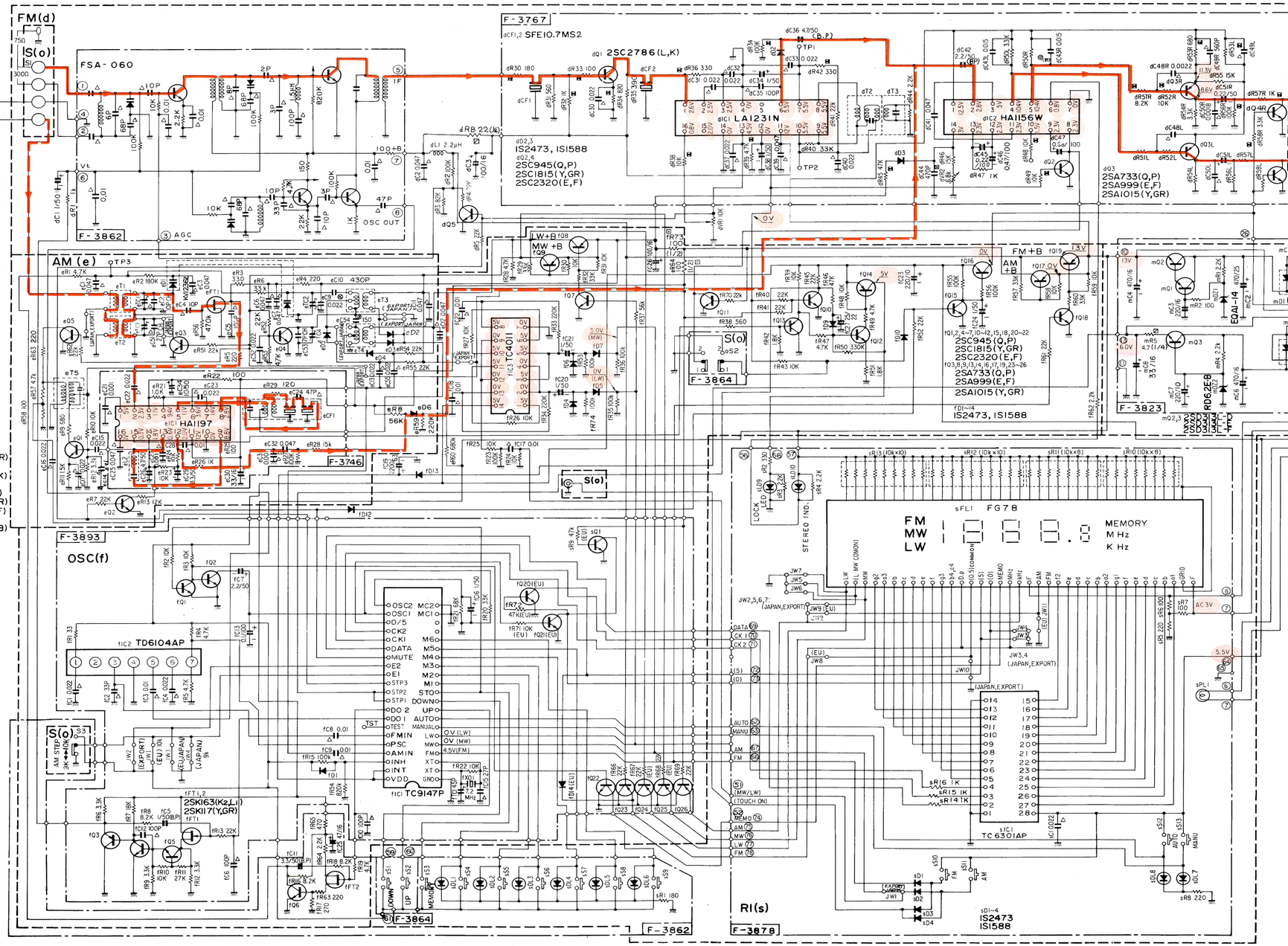

7. MAIN PARTS REPLACEMENT

A. Side Panel L (R)

1) Remove four screws (Sx) fixing side panel L and R from rear panel side. (See Fig. 7-1)
2) Remove bonnet and bottom plate.
3) Shift the position of the side panel L (R) 2 cm in the arrow direction (1) and then pull it the arrow direction (2) to remove the side panel L (R). (See Fig. 7-1)

Fig. 7-1

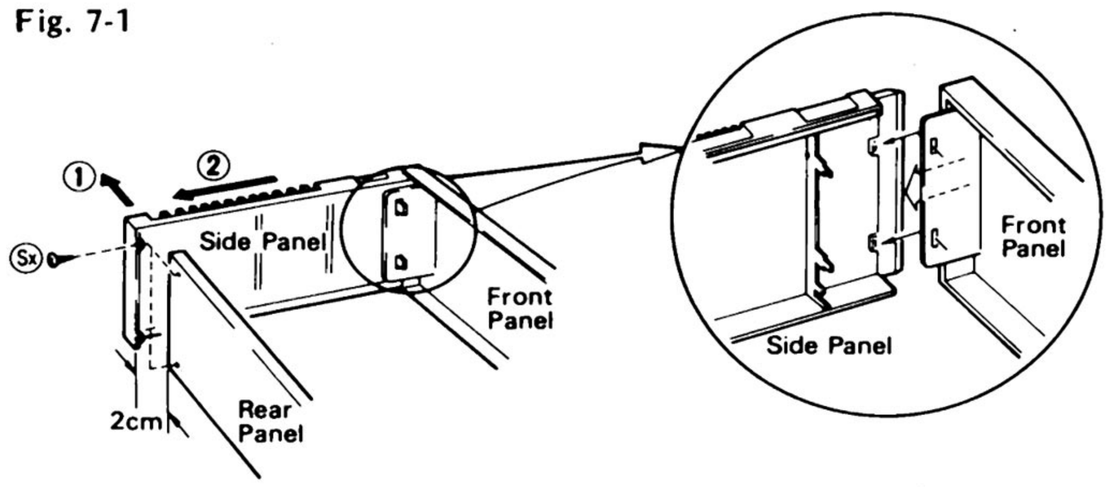

B. Front Panel Ass'y

1) Remove four screws (Sx) fixing side panel L and R from rear panel side (See Fig. 7-1)
2) Remove bonnet and bottom plate.
3) Remove side panel L and R. (See Replacement A)
4) Remove Digitally Display Circuit Board F-3878 from Display Stage.
5) Remove Display stage from front panel ass'y.

8. NOTES

8-1. Notice when the user moves from 9 kHz to 10 kHz step area, or vice versa, in AM broadcasting frequency.

AM programs are being broadcast under channel plans which, depending on the broadcasting area in the world, are characterized by different channels (frequency intervals) between braodcasting stations. In North, South, and Central America, this channel is 10 kHz whereas in the rest of these areas, it is 9 kHz.
This unit is a synthesizer tuner which varies the reception frequency at each 9 kHz or 10 kHz channel (frequency interval) during auto search reception. If the client uses the unit in an area with a different channel plan, he may not be able to receive AM stations. The unit he has purchased has been originally adjusted to the channel in his area. It is therefore necessary to change over the channel setting if he moves to an area with a different channel plan.
It is impossible to receive AM broadcasting in Automatic Tuning operation. In this case, use the AM 9 kHz/10 kHz selection switch (S3) installed on the circuit board F-3862 in accordance with Table 8-1.
If no switch S3 is installed, change the position where the jumper wire is connected.

8-2. Notice when the user moves from 50 kHz to 100 kHz step area, or vice versa, in FM broadcasting frequency.

In this case, change the positions where the Parts is connected on the circuit board F-3893 in accordance with Table 8-2.
(In most of countries, frequency-step between two FM stations is every 100 kHz, but in some areas of Europe, it is 50 kHz asides.)

Table 8-1

Switch	10 kHz Frequency Step	9 kHz Frequency Step
S3	Set 10 kHz	Set 9 kHz

Table 8-2

Frequency Step		Jumper Wire <F-3893>			
AM	FM	JW1	JW2	JW3	JW4
9k	100 kHz	Remove	Connect	Remove	Remove
10k	100 kHz	Connect	Connect	Remove	Remove
9k	50 kHz	Connect	Remove	Connect	Remove
*9k	50 Hz	Remove	Remove	Connect	Connect

* South African of Bureau Standard

www.hifiengine.com

9. PACKING LIST

Parts No.	Stock No.	Description
1	07599500	Vinyl Cover
2	07965300	Styrofoam Packing
3	47008600	Carton Case (T-909 Silver Model)
	47008700	Carton Case (T-909 Black Model)
	47008400	Carton Case (T-909L Silver Model)
	47008500	Carton Case (T-909L Black Model)

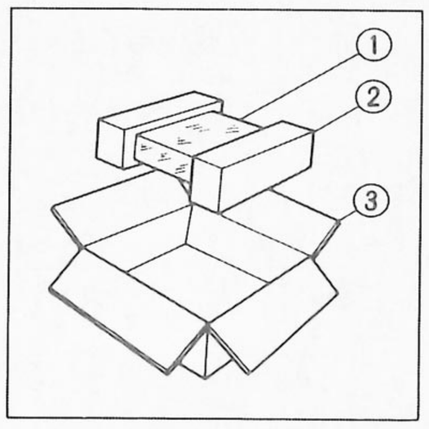

10. ACCESSORY LIST

Stock No.	Description
46356700	Operating Instruction (T-909)
46356800	Operating Instruction (T-909L)
46051700	FM Antenna
46145700	AM Loop Antenna
07563000	Antenna Holder
38103200	Pin Plug Cord
46267300	Mini Pin Plug Cord

Sansui

SANSUI ELECTRIC CO., LTD.: 14-1, Izumi 2-chome, Suginami-ku, Tokyo 168 Japan
PHONE: (03) 324-8891/TELEX: 232-2076 (International Division)
SANSUI ELECTRONICS CORPORATION: 1250 Valley Brook Ave. Lyndhurst, N.J. 07071 U.S.A.
333 West Alondra Blvd. Gardena, California 90247 U.S.A.
3036 Koapaka St. Honolulu, Hawaii 96819 U.S.A.
SANSUI ELECTRONICS (U.K.) LTD.: Unit 10A, Lyon Industrial Estate, Rockware Avenue, Greenford, Middx UB6, OAA, England
SANSUI ELECTRONICS G.M.B.H.: Paul Ehrlich Strasse 8, 6074 Rödermark 2, West Germany

(SM1-64) Printed in Japan (O20030M) <Stock No. 36470600>